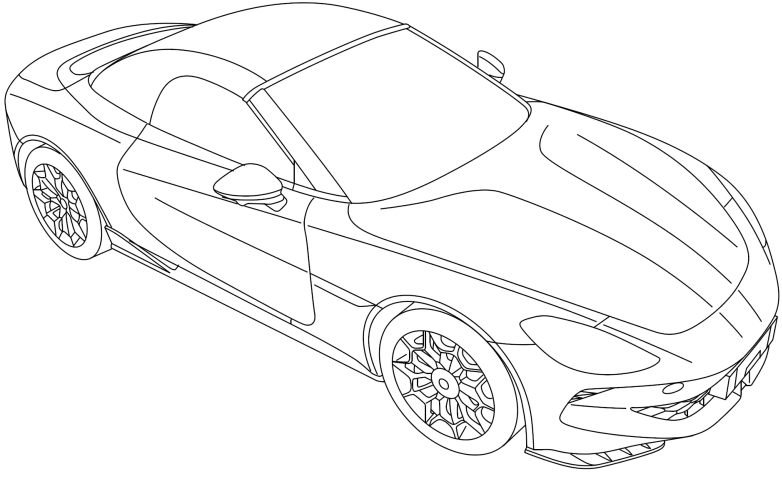

CONTENTS

MG Cyberster **1**

1 Foreword **15**

Introduction **16**

Owner's Handbook 16

Announcement 16

Symbols Used 17

In Emergencies 18

Vehicle Identification Information **19**

Vehicle Identification Markings 19

Vehicle Identification Plate 20

Instructions for Use of Electric Vehicle **22**

Ambient temperature for using vehicle 22

Instructions for recycling high-voltage battery packs 22

Driving Range 23

Equalisation Charging 24

Intelligent Charging 24

Intelligent Heating 24

Crash Outage Control 25

High Voltage System - 2WD 25

High Voltage System - 4WD 27
Precautions in the Event of an Accident 29

2 Instruments and Controls 31

Instrument Pack 32
Warning Message 33
Warning Lamps and Indicators 34
Lights and Switches 45
Master Light Switch 45
Headlamp Levelling Adjustment 46
Light Lever Switch 47
Turn Signal Lamp 50
Rear Fog Lamps 51
Hazard Warning Lamps 51
Wipers and Washers 52
Front Windscreen Wiper and Washer Operation 52
Windscreen Wash and Wipe 53
Steering System 54
Steering Wheel Position Adjustment 54

CONTENTS

Steering Feel 55
Electric Power Assisted Steering (EPS) Warning Lamp 55
Horn 56
Rearview Mirrors 57
Exterior Rearview Mirrors 57
Interior Rearview Mirrors 59
Sunvisor 60
Windows 61
Power Operated Window Switch 61
Window Operation 62
Interior Lighting 64
Convertible Soft Top 65
Instructions for Use 65
Electric Operation of Convertible 66
Thermal Protection 66
Manual Operation of Convertible 67
Convertible Maintenance 70
Power Socket 71

Front USB Port 71
Trunk Power Socket 72
Alcolock * 73
Storage Devices 74
Instructions for Use 74
Glove Box 74
Storage Box 75
Cup Holder 76
Centre Console Cup Holder 76
3 Air Conditioning System 77
Ventilation 78
A/C Filter Element 79
Vents 79
A/C Control Panel 81
4 Seats and Restraints 83
Seats 84
Power Seat 84

CONTENTS

Seat Heating Function 84
Memory Seat 86
Personalized Setting of Seat Position (With the driver side as an example) 86
Seat Belt 87
Protection Provided by Seat Belts 88
How to Wear Seat Belts Properly 89
Seat Belt Pre-tensioners 92
Seat Belt Checks, Maintenance and Replacement 93
Airbag Supplementary Restraint System 96
Overview 96
Airbag Deployment 98
Conditions in Which Airbags Will Not Deploy 102
Service and Replacement of Airbags 104
Disposal of Airbags 105
Active Pedestrian Protection System * 106
Overview 106
5 Starting and Driving 107
Keys 108

Overview 108
Replacing the Smart Key Battery 111
Anti-theft Systems 112
Power Immobiliser 112
Body Anti-theft System 112
Detection function* 121
Tailgate 123
Starting and Stopping Power System 124
Stopping Power System 125
Economical and Environmental Driving 126
Running-in 126
Environment Protection 126
Economic Driving 126
Driving in Special Environment 127
Check and Service 128
Charging and Discharging Requirements 129
Charging Your Vehicle at Home 129
Charging Pile 130
Home Charging Guide 130

CONTENTS

Charging and Medical Condition Awareness 131
Charging Port 131
Electric Charging Identifier Label 133
Rapid Charging 135
Slow Charging 135
Charging Information 137
Equalisation Charging 137
Charging Time 137
Discharging 140
Electric Drive Unit 142
Instructions for Use 142
Gear Shift 142
Protection Mode 143
One-Pedal Driving Function 145
Driving Mode 146
Energy Regeneration during Coasting 148
Brake System 150
Overview 150
Parking Brake System - Electronic Parking Brake (EPB) 150

Service Brake System 152
Auxiliary Brake System 158
Adaptive Cruise Control (ACC) 159
Adaptive Cruise Activation 159
Adaptive Cruise Target Following Distance Adjustment 161
Adaptive Cruise Target Speed Adjustment 161
Adaptive Cruise Pause 162
Automatic Deactivation of Adaptive Cruise 162
Adaptive Cruise Override 162
Adaptive Cruise Resume 163
Clearing Target Speed Memory 163
Special Driving Environments 164
Driver Assistance System 167
Front View Camera Description 167
Intelligent Overspeed Alert 169
Speed Limit Assist System 171
Intelligent Cruise Assist System (ICA) 175
Forward Collision Assist System 179
Lane Departure Assist System 182

CONTENTS

Pedestrian Alert System (PAS) **185**
PDC System **186**
Ultrasonic Sensor PDC System 186
360 Around View Monitor System 188
Rearward Driver Assistance System **189**
System Overview 189
Turning On/Off the System 190
Blind Spot Safety Assist 190
Rear Cross Traffic Alert (RCTA) and Rear Cross Traffic Brake (RCTB) 192
Door Opening Warning 194
Rearward Collision Warning 195
Tyre Pressure Monitoring System (TPMS) **196**
Load Carrying **197**
Load Space 197
Internal Loading 198
6 Emergency Information **199**
Hazard Warning Devices **200**
Warning Triangle 200

eCall-SOS Emergency Assistance* **201**
Vehicle Recovery **203**
Vehicle Towing 203
Vehicle Transport 207
Jump Start **208**
Tyre Repair **210**
Tool Identification (including tyre repair tool) 210
Tyre Repair 210
Fuse Replacement **213**
Fuse 213
Passenger Compartment Fuse Box 214
Front compartment fuse box 216
Bulb Replacement **221**
Bulb Specification 221
7 Service and Maintenance **223**
Maintenance **224**
Routine Servicing 224
Bonnet **227**

CONTENTS

Opening the Bonnet from Inside....227
Closing the Bonnet....227
Bonnet Open Alarm....227
Opening the Bonnet from Outside....228
Front Compartment....229
Cooling System....230
Coolant Check and Top Up....230
Coolant Specification....230
Battery....232
Battery Maintenance....232
Battery Replacement....233
Windscreen Washer....234
Washer Fluid Check and Top Up....234
Washer Nozzles....235
Wipers....236
Front Windscreen Wiper Blade Replacement....237
High-voltage Battery Pack....238
Precautions and restricted conditions for use of battery....238

Brake **240**
Brake Fluid Check and Top Up 240
Brake Fluid Specification 241
Tyres **242**
Overview 242
Tyre Inspection 244
Tyre Wear Indicators 245
Tyre Rotation 246
Anti-skid Chain 247
Cleaning and Vehicle Care **248**
Automobile External Care 248
Automobile Internal Care 251
8 Technical Data **253**
Technical Data Dimensions **254**
Complete Vehicle Mass Parameters **256**
Parameters of Traction Motor **257**
Dynamic Performance Parameters **258**
Recommended Fluids and Capacities **259**

CONTENTS

Wheel Alignment (unladen) **261**
Wheels and Tyres **262**
Tyre Pressure (Cold) **263**

Foreword

Introduction 16

Vehicle Identification Information 19

Instructions for Use of Electric Vehicle 22

Introduction

Owner's Handbook

This handbook describes all the standard features and functions of the vehicles within the model range. Some information may be inapplicable to your individual model.

If you have any questions about the operation and parameters of the vehicle, please contact a local Authorised Repairer which will provide you with the best service.

A local Authorised Repairer in the Owner's Handbook is the MG Authorised Repairer.

The illustrations in the Owner's Handbook are for reference only.

The information contained in this handbook may vary slightly depending on the vehicle configuration, software version and sales regions.

Announcement

The strategy of our company is to make continuous improvements to the products, therefore, we reserves the right to make changes in the product without further notice after the handbook is printed.

This handbook includes up-to-date information as of printing. Except for personal injury caused by negligence of the manufacturer or local Authorised Repairer, the manufacturer or local Authorised Repairer shall not be liable for any error and its consequences, including property damage or personal injury.

Symbols Used

Warning

This warning symbol identifies procedures that must be followed precisely, or information that must be considered with great care, in order to reduce the risk of personal injury or serious damage to the car.

IMPORTANT

IMPORTANT
The statements stated here must be followed strictly, otherwise your car could be damaged.

Note

Note: This describes helpful information.

This symbol indicates parts described must be disposed of by authorised persons or bodies to protect the environment.

Asterisk

An asterisk (*) appearing after the title or the text, identifies features or items of equipment that are only fitted to some models, and may not be fitted on the vehicle your purchased.

Illustration Information

Identifies components being explained.

Identifies movement of components being explained.

In Emergencies

IMPORTANT
Remember the breakdown safety code If a breakdown occurs while travelling: • Wherever possible, consistent with road safety and traffic conditions, the car should be moved off the main thoroughfare, preferably into a lay-by. If a breakdown occurs on a motorway, pull well over to the inside of the hard shoulder. • Switch on hazard lights. • If available, position a warning triangle or a flashing amber light 50 to 150 metres (150 to 500 ft) behind your vehicle to warn approaching traffic. Note it is a legal requirement of some countries that a warning triangle is carried in the vehicle, if in doubt consult the local highways agency for further information. • Consider evacuating passengers through nearside doors onto the verge to reduce risk of injury in the event of collision.

Vehicle Identification Information

Vehicle Identification Markings

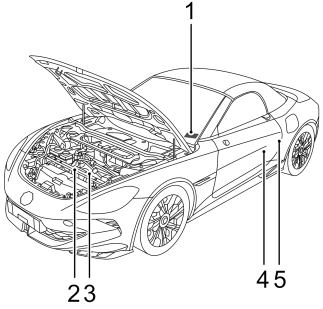

1 Vehicle Identification Number (VIN)

2 Drive Motor Number - Front *

3 Electric Drive Unit Number - Front *

4 Drive Motor Number - Rear

5 Electric Drive Unit Number - Rear

When communicating with your MG Authorised Repairer, always quote the Vehicle Identification Number (VIN) . If the drive motor or electric drive transmission is involved, it may be necessary to provide the identification numbers of these assemblies.

Vehicle Identification Number (VIN) Location

Vehicle Identification Number (VIN)

- Stamped in inner side of the bonnet visible by opening the bonnet;
- On the floor under the driver seat;
- Stamped on the instrument panel visible through the bottom left hand corner of the windscreen;
- On the identification plate;
- On the inner side of the tailgate visible by opening the tailgate.

Note: The DLC of the vehicle is located above theaccelerator pedal, and the VIN information can beread with the special scan tool of manufacturer.

Drive Motor Number

Stamped on the lower part of the drive motor housing.

Electric Drive Transmission Number

Stamped on the upper part of the electric drive transmission housing.

Vehicle Identification Plate

The vehicle identification plate contains the vehicle brand, vehicle model, seat capacity, manufacturing country, etc.

Location of Vehicle Identification Plate

The identification plate is located at the lower side of right pillar as shown.

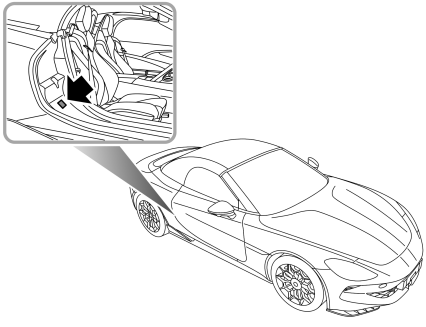

Instructions for Use of Electric Vehicle

Ambient temperature for using vehicle

The working performance of the high-voltage battery pack fitted to your vehicle is related to the ambient temperature. This battery powers the vehicle power system, and therefore it is recommended that where possible the vehicle should be used within the temperature range of -15℃~45℃ . This will ensure that the vehicle is in the optimum working state, and help extend the service life of the high-voltage battery pack. Extremely high or low temperatures will affect the performance of the high-voltage battery pack and vehicle.

Instructions for recycling high-voltage battery packs

The high-voltage battery pack fitted to your vehicle contains several lithium based battery cells. It is fitted to the motor-vehicle chassis. Arbitrary disposal may cause pollution, hazard and damage to the environment. The high-voltage battery pack MUST be recycled by an MG Authorised Repairer or a professional approved dismantling agent. Please refer to the following information and requirements.

- Personnel: ONLY qualified personnel should dismantle the high-voltage battery pack.
- High-voltage safety: the high-voltage battery pack fitted to your vehicle features high-voltage components such as lithium battery pack and high-voltage harness. DO NOT attempt to dismantle any area of this system, suitably trained professional staff must observe insulation safety protection before working on or near the high voltage system.
- Transportation: The high-voltage battery pack is classed as a Category 9 hazardous material and must be transported by vehicles qualified in transporting Category 9 hazardous materials.
- Storage: All high-voltage components (including the high-voltage battery pack) should be stored at room temperature and in a dry environment. They must be kept away from dangerous sources, such as flammable objects, heat and water sources.
- Internal composition: The high-voltage battery pack consists of lithium batteries (pack), PCB, HV/LV harness, metal casing and other components.

It is strongly recommended that the used high-voltage battery pack generated from vehicle scrappage or any other reasons should be disposed of by an MG Authorised Repairer.

Note: Waste high-voltage battery packs should be handed over to other units for disposal. If dismantling or dismantling high-voltage battery packs without authorization leads to environmental pollution or safety accidents, the owner of the high-voltage battery pack should bear corresponding responsibilities.

Driving Range

The driving range of your vehicle depends on the quantity of available electricity, vehicle age (current remaining battery life), weather, temperature, road conditions and driving habit etc.

The range can be affected by other electrical loads (such as A/C and lights) and driving style.

Caution:

- The driving range is related to the depth of discharge (DOD). When the low battery warning lamp of high-voltage battery pack on the instrument pack illuminates, please recharge the battery as soon as possible to avoid high DOD affecting the performance of high-voltage battery pack.
- The actual driving range of the vehicle will reduce with the increase of vehicle age.
- The use of air conditioning will reduce the driving range.
- The driving range varies with the speed.
- When the vehicle is used at low temperatures, the driving range will decrease due to temperature characteristics of the battery.
- In the case of extreme temperature and low battery, weak acceleration or lack of power may occur due to battery characteristics.

The driving range can be increased by:

- Having the vehicle maintained regularly;
- Maintaining proper tyre pressures;
- Use the vehicle as few as possible at high or cold temperatures.
- Do not park or store the vehicle for long periods with a low state of charge, where possible charge the vehicle as soon as possible prior to storage.
- Remove unnecessary articles to reduce the vehicle load.

- When necessary, turn off the high power consuming systems that will use large amounts of power, such as A/C and heating, to increase the driving range.
- At high vehicle speed, close the vehicle windows to reduce the air resistance and electricity consumption.
- Keep a steady speed.
- Depress the accelerator pedal as lightly as possible during acceleration.
- During deceleration, release the accelerator pedal; under certain conditions when not applying the brake or gently applying the brake, the kinetic energy regeneration system (KERS) will extend the driving range.

Equalisation Charging

In order to assist in extending the service life of the high-voltage battery pack, it is recommended that an equalisation charging should be carried out at regular intervals.

For the necessity of equalisation charging, refer to "Equalisation Charging" under "Starting and Driving" chapter.

Intelligent Charging

When the vehicle is powered OFF and the system detects that the 12V battery is running low, the vehicle will automatically charge the 12V battery under certain conditions to ensure the vehicle starts. This function will be automatically turned off upon completion of charging.

Note: The system will suspend intelligent charging if afault is present, when starting or the vehicle is being charged by an external device.

Note: The driving range will be reduced after intelligent charging.

Note: The intelligent charging function is suspended when the high voltage battery is in a low SOC.

Intelligent Heating

The user can turn on/off intelligent heating on the charging management interface of the entertainment display. When the vehicle runs at low temperatures or navigates to a charging station, it is recommended to turn on intelligent heating, which will preheat the high-voltage battery pack. This can improve the driving performance and charging speed in low temperature environment, but will consume part of the power, resulting in reduced driving range.

Crash Outage Control

If a crash occurs, a signal from the SDM will disconnect the relays within the high-voltage battery back to cut off the high-voltage output of the high-voltage battery pack.

High Voltage System - 2WD

- ***There are two kinds of high voltage power supplies (AC and DC) in the high voltage system of the vehicle. These high voltage system components are attached with warning labels of high voltage system. Please always observe the safety requirements on the labels.***
- ***To avoid personal injury, non-professional maintenance personnel are prohibited from contacting, dismantling or fitting any component of the high-voltage system without permission.***

The high voltage system component layout is shown below:

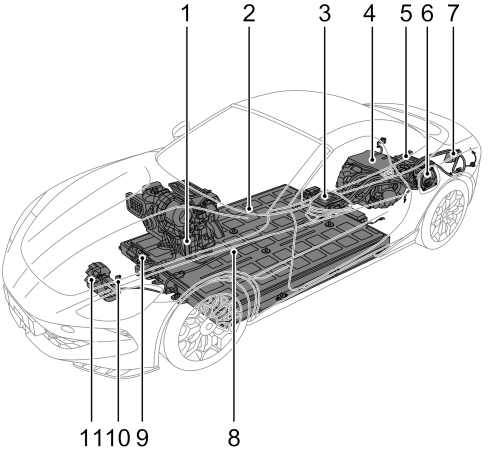

1 Electric heater
2 High-voltage Battery Pack
3 HV Side Power Distribution Unit (PDU)
4 Electric Drive Unit
5 Combined Charging Unit (CCU)
6 Charging Port
7 Communication Gateway
8 High-voltage Harness
9 Battery Heater
10 Manual Service Disconnect
11 Electric A/C Compressor

High Voltage System - 4WD

- *There are two kinds of high voltage power supplies (AC and DC) in the high voltage system of the vehicle. These high voltage system components are attached with warning labels of high voltage system. Please always observe the safety requirements on the labels.*
- *To avoid personal injury, non-professional maintenance personnel are prohibited from contacting, dismantling or fitting any component of the high-voltage system without permission.*

The high voltage system component layout is shown below:

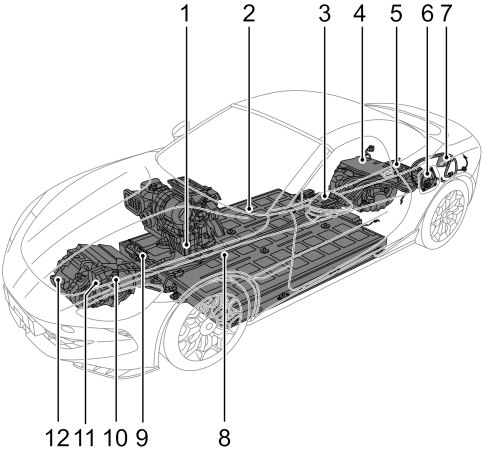

1 Electric heater
2 High-voltage Battery Pack
3 HV Side Power Distribution Unit (PDU)
4 Rear Electric Drive Unit
5 Combined Charging Unit (CCU)
6 Charging Port
7 Communication Gateway
8 High-voltage Harness
9 Battery Heater
10 Manual Service Disconnect
11 Electric A/C Compressor
12 Front Electric Drive Unit

Precautions in the Event of an Accident

- *Keep the shift lever in P gear, and power off the vehicle.*
- *If the wires are exposed, do not touch any of them, to avoid electric shock.*
- *If the vehicle is on fire and the fire is small and slow, carbon dioxide extinguisher can be used to put out the fire, and contact the fire department as soon as possible. If the fire is big and quick, the user should immediately stay away from the vehicle and contact the fire department.*
- *In case of a collision, the vehicle is not allowed to be started again, and the negative cable of 12V low-voltage battery and manual service disconnect should be disconnected before rescue.*
- *When the vehicle is completely or partially submerged in water, the user should power off the vehicle and escape from the vehicle timely. The negative cable of 12V low-voltage battery and manual service disconnect should be disconnected before transporting the salvaged vehicle. If there is no bubble or sizzle sound while salvaging, the vehicle salvaging can be continued. If there are bubbles or sizzle sound, the salvaging should be suspended until no bubble or sizzle sound emits. At this time, there is no risk of electric shock when touching the body or structure of the vehicle in or out of water.*
- *Please contact an MG Authorised Repairer for service after the accident is handled.*
- *The vehicle is provided with an emergency rescue manual. When rescuers arrive at the scene, please show the emergency rescue manual to them.*

Instruments and Controls

Instrument Pack 32

Warning Lamps and Indicators 34

Lights and Switches 45

Wipers and Washers 52

Steering System 54

Horn 56

Rearview Mirrors 57

Sunvisor 60

Windows 61

Interior Lighting 64

Convertible Soft Top 65

Power Socket 71

*Alcolock ** 73

Storage Devices 74

Cup Holder 76

Instrument Pack

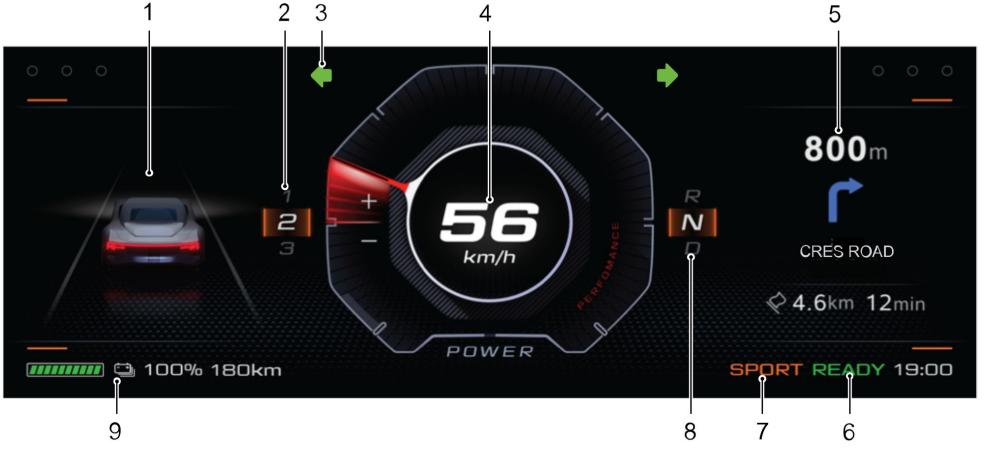

***Note:** The instrument pack has two display themes, which can be set in the entertainment display.*

1 Driver Assistance

Displays the current driver assistance messages of the vehicle. Refer to the "Driving Mode" section for details.

2 Energy Regeneration Mode

3 Warning Lamps and Indicators

Refer to "Warning Lights and Indicators" in this chapter for details.

4 Vehicle Speed

5 Right Cards

Displays the cumulative mileage, mileage since charging, current mileage, navigation, vehicle status, fault centre, multimedia, etc. The card display can be set in the Vehicle Settings on the entertainment display.

6 Power System State

7 Driving Mode

Displays the current driving mode of the vehicle. Refer to the "Starting and Driving" chapter for details.

8 Gear Information

Displays the current gear information of the vehicle. Refer to the "Starting and Driving" chapter for details.

9 Electricity Meter and Electricity Driving Range

Warning Message

The message centre of instrument pack displays the warning messages by pop-up box. The warning messages are mainly classified into:

- Operation Instructions
- System State Prompts
- System Malfunction Alert

Please follow the text prompts or refer to relevant control system sections for the failure cause and appropriate solutions.

Warning Lamps and Indicators

When the vehicle is starting or traveling, if the warning lamps or indicators appear on the instrument, it indicates that the relevant system is in a certain state or is faulty. Some warning lamps illuminate or flash with warning tones or prompt message.

Please carefully read the following instructions to understand the meaning of relevant warning lamps and indicators. In case of a failure, please take corresponding measures in time and contact a local Authorised Repairer for service as soon as possible.

Name	Icon	Note
Side Lamp Indicator		Side lamps are on.
Low Beam Indicator		Headlamp low beams are on.
High Beam Indicator		Headlamp high beams are on.

Direction Indicator Lamp		When the left or right turn signal lamp flashes, the direction indicator lamp on the corresponding side also flashes. If the hazard warning lamps are turned on, both direction indicator lamps will flash simultaneously. If either direction indicator lamp in the instrument pack flashes very rapidly, it indicates the turn signal lamp on the corresponding side has failure.
Smart High Beam Indicator		Smart high beams are on.
Rear Fog Lamp Indicator		Rear fog lamps are on.
Anti-theft System Warning Lamp		If this lamp illuminates, it indicates that no valid key is detected, in which case please use the correct key, or put the smart key in the standby starting position. For details, refer to "Standby Starting Procedure" in "Starting and Driving" chapter.
Seat Belt Unfastened Warning Lamp		The driver or passenger does not wear the seat belt.

Airbag Warning Lamp		There is a failure in the SRS or seat belt. Stop the car as soon as safety permits and power off the vehicle. Otherwise there may be a risk that SRS system or seat belt cannot work properly when the crash accident occurs.
Low-voltage Battery Charging System Malfunction Warning Lamp		If this lamp illuminates after starting the vehicle, it indicates that low-voltage battery charging system failed. If this lamp flashes, it indicates low battery, the prompt message will appear in the instrument pack. Then the system will restrict or turn off some electrical appliances, please start the vehicle to charge the low-voltage battery.
Tyre Pressure Monitoring System (TPMS) Warning Lamp		If this lamp illuminates, it indicates that the tyre pressure is low. Please check the tyre pressure. If this lamp flashes and then remains ON after a period of time, it indicates the system has a failure.

Electric Power Steering (EPS) System Warning Lamp		The electric power steering system has a general failure, and its performance is reduced. The vehicle can be driven for a short period of time. Please seek a local Authorised Repairer immediately.
		If this lamp illuminates, it indicates that the electric power steering system has a general failure relevant to the steering angle. The vehicle can be driven for a short period of time. Please seek a local Authorised Repairer immediately. If this lamp flashes, it indicates that the electric power steering system has a serious failure, and is difficult in steering. Please stop the vehicle as soon as safety permits and seek a local Authorised Repairer immediately.
Dynamic Stability Control/Traction Control System OFF Warning Lamp		The dynamic stability control system and traction control system are off.
Dynamic Stability Control/Traction Control System Warning Lamp		If this lamp illuminates, it indicates that the dynamic stability control system/traction control system has failed. If this lamp flashes while driving, it indicates that the system is operating to assist the driver.

Brake System Malfunction Indicator Lamp		The brake system has a failure, please stop the car as soon as safety permits and power off the vehicle.
ABS Malfunction Indicator Lamp		The ABS failed. If an ABS failure occurs while driving, the ABS function will be disabled while normal braking will still be available.
AUTO HOLD System Indicator Lamp		The auto hold function is standby.
		The auto hold function is activated.
		The auto hold function failed.
Electronic Parking Brake (EPB) System Status Indicator Lamp		If this lamp illuminates, it indicates that the EPB system is enabled. If this lamp flashes, it indicates that the EPB system has a failure.
Electronic Parking Brake (EPB) System Malfunction Indicator Lamp		It indicates that the EPB system has a failure.

4WD System Warning Lamp*		4WD function is faulty.
Charging/Discharging Connection Indicator Lamp		The charging/discharging gun is connected.
Power System Malfunction Indicator Lamp		A general failure occurs in the power system and its functions are limited.
		The power system has a severe failure, please stop the car as soon as safety permits and power off the vehicle.
Drive Power Restricted Warning Lamp		The drive power is restricted.
Power Battery Warning Lamp		The power battery has a general failure, please seek a local Authorised Repairer urgently.
		The power battery has a severe failure, please stop the vehicle as soon as conditions permit, power off the vehicle, and seek a local Authorised Repairer for service immediately.

Motor System Malfunction Indicator Lamp		The motor system has a general failure, please seek a local Authorised Repairer urgently.
		The motor system has a severe failure, please stop the vehicle as soon as conditions permit, power off the vehicle, and seek a local Authorised Repairer for service immediately.
READY Indicator	READY	The vehicle is ready for running.
Power Battery Level Indicator		If this lamp illuminates, it indicates that the battery of power battery pack is low, please charge it as soon as possible. If this lamp flashes, it indicates that the battery of power battery pack is low, please charge it immediately.
Charging/Discharging Status Indicator		The vehicle is being charged.
		The vehicle is being discharged.
		Charging/discharging failure.

Rearward Driver Assistance System Warning Lamp		The rearward driver assistance system is faulty.
Forward Collision Assist System Indicator Lamp		If this lamp flashes , it indicates the forward collision assist system is activated. If this lamp illuminates , it indicates the forward collision assist system is turned off, faulty or unavailable.
Lane Departure Assist System Indicator		The lane departure assist function is activated.
		Any function of the lane departure assist is malfunctions.

Intelligent Cruise Assist System Indicator		The intelligent cruise assist system is on and not in Standby state.
		The intelligent cruise assist system is in Standby state.
		The intelligent cruise assist system is activated.
		The intelligent cruise assist system malfunctions.
Adaptive Cruise Control System Indicator	NNN	The adaptive cruise control system is activated and not in Standby state.
	NNN	The adaptive cruise control system is in Standby state.
	NNN	The adaptive cruise control system is activated.

Speed Limit Assistance System Indicator	LIM NNN	Manual speed limit assistance system is in Standby state.
	LIM NNN	If this lamp illuminates, it indicates that the manual speed limit assistance system is activated. If this lamp flashes, it indicates that current speed is greater than the speed limit value.
	LIM AUTO	Intelligent speed limit assistance system is in standby state.
	LIM AUTO	Intelligent speed limit assistance system is activated.
Cruise/Speed Limit System Malfunction Indicator Lamp		The constant speed cruise control system, adaptive cruise control system or speed limit assistance system has a failure.
Speed Limit Sign Speed Indicator	NNN	" NNN " indicates the speed limit sign speed currently identified. When the vehicle speed is greater than the speed limit value, the lamp will flash.

Conditional Speed Limit Indicator		The speed limit sign currently identified has conditional information. Please check.
Driver Status Indicator		If this lamp illuminates, it indicates that the driver detection system fails or is not available. If this lamp flashes, it indicates that the driver fatigue or distraction is detected.
Pedestrian Protection Indicator		The active cover lifts up after ignition or the pedestrian protection system fails.
Emergency Call Indicator*		The system is ready for eCall-SOS emergency assistance service.
		The eCall-SOS emergency assistance system can send the vehicle information to the Call Center, but the other functions are limited due to system failure.
		The eCall-SOS emergency assistance system failed and cannot work.

Lights and Switches

Master Light Switch

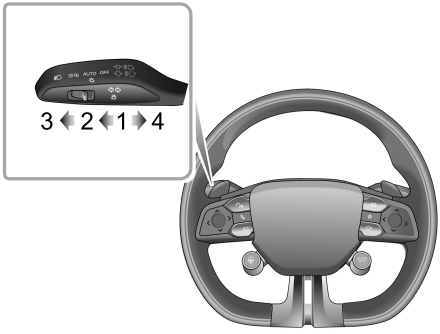

AUTO	AUTO Lamp (1)
	Side Lamp and Switch Backlights (2)
	Headlamp (3)
OFF	AUTO Lamp Off (4)

AUTO Lamp

When the vehicle is powered on, the AUTO lighting system is on by default, and the system will automatically switch the side lamps/switch backlights on and off according to the intensity of current ambient light.

Note: This function is realized by a sensor mounted in your vehicle to monitor the exterior light levels in real time. It is installed in the interior rearview mirror base . DO NOT mask or cover this area. Failure to adhere to this may result in the headlamps being turned on unnecessarily.

Side Lamp/Switch Backlights

When the vehicle is powered on, move the master light cycle switch to Position 2 to switch on the daytime running lamps, side lamps and switch backlights.

When the vehicle is powered off through the entertainment display, if the side lamps are on even after the driver's door is open, the vehicle will give a warning alarm, and the instrument centre will display "Please turn off the light".

Headlamp

When the vehicle is powered on, move the master light cycle switch to Position 3 to switch on the low beams and side lamps/switch backlights.

AUTO Lamp Off

Move the Light switch to 4 to turn off the auto lamp.

Daytime Running Lamp

When the vehicle is powered on, the daytime running lamps automatically illuminates. When the low beam is turned on, the daytime running lamp goes out automatically.

Follow Me Home

When the vehicle is powered off through the entertainment display. Follow Me Home function is enabled. The external lamps will illuminate. Follow Me Home function can be turned on and off in the Vehicle Settings interface on the entertainment display.

Headlamp Levelling Adjustment

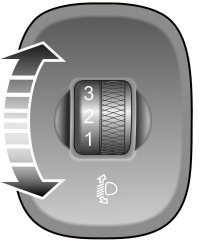

The headlamp levelling can be adjusted as per the following table according to the vehicle load.

Location	Load
0	Driver, or driver & front passenger
1	All the seats occupied with no load in the boot
2	All the seats occupied plus an evenly distributed load in the boot
3	Driver only, plus an evenly distributed load in the boot

Light Lever Switch

Take care not to dazzle oncoming vehicles when switching between the main and dipped beams.

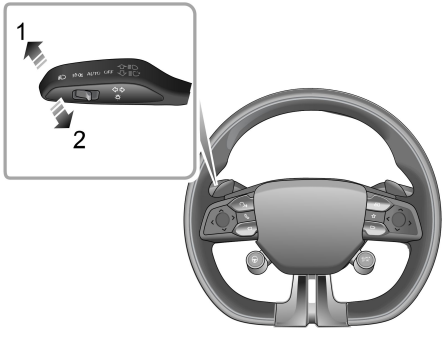

Switching between High Beam and Low Beam Headlamps

When the vehicle is powered on and the low beams illuminate, push the light lever switch towards the

instrument panel to turn on the high beams, and the high beam indicator on the instrument pack illuminates. Push or pull the lever once again to switch to low beams.

High Beam Flash

When pulling the lever towards the steering wheel and release it several times, the high beam will flash to remind the vehicle ahead or give a hint.

Smart High Beam System

The Automatic High Beam serves only as an auxiliary function. The driver must check the status of the front lamps, and turn on the front lamps when necessary.

The Automatic High Beam may not operate normally in the following cases, but not limited to them, so the main and dipped beams should be switched manually:

- ***The windscreen is dirty, broken or obstructed by other objects blocking the view of the sensor.***
- ***The lamps of other vehicles are missing, damaged, blocked or cannot be detected due to weather and other reasons.***
- ***When pedestrians, non-motor vehicles and other objects with no obvious light or reflected light are encountered.***
- ***When the headlamps and tail lamps of other vehicles cannot be detected due to the sensor view being impaired due to undulating road conditions such as bends, dips or hills.***
- ***When the car is driving on a winding road or mountainous road.***
- ***The wiper switch is in the "Fast" position.***

Smart high beam system can detect the light intensity of the vehicle ahead by the front view camera, and the high beams

can be turned on or off once certain conditions are met. When the smart high beam system is enabled, the smart high beam indicator on the instrument pack illuminates. The smart high beam function can be turned on and off in the Settings interface on the entertainment display.

With the automatic control, when it is dark and there is no vehicle in the surroundings, the system will turn on the high beams; when it is quite bright or the system detects the headlamps or tail lamps ahead, the system will turn off the high beams.

To enable the smart high beam system, the following conditions should be met:

1 The light lever switch is placed in position " AUTO " and the low beams automatically turn on.

2 The vehicle is running with the speed exceeding 40 km/h.

The smart high beam system automatically exits when the following conditions are met: With the system exited, quick pushing the high beam ON switch twice towards the instrument panel will enter the smart high beam system again. This feature can only be turned off three times in a start cycle, and if it is exited more than three times, the feature cannot be enabled again in the current start cycle:

- When the smart high beam system is enabled and low beams automatically turn on, manually switch to high beams.
- When the smart high beam system is enabled and high beams automatically turn on, manually switch to low beams.
- When the smart high beam system is enabled and high beams automatically turn on, toggle the high beam flashing switch.

IMPORTANT
The Automatic High Beam function uses data from the front view camera, always keep the windscreen clean and free from residue in this area to maintain optimum performance of this system. Any damage in this area,such as stone chips must be repaired at the earliest convenience.

Turn Signal Lamp

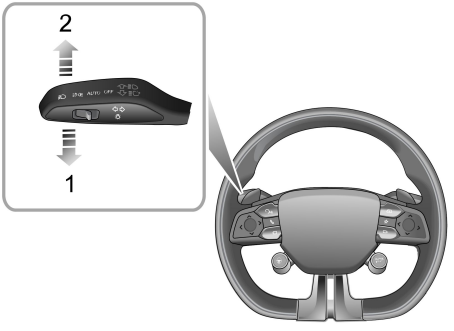

When the vehicle is powered on, move the light lever switch up or down to turn on the turn signal lamp. The corresponding GREEN indicator lamp in the instrument pack will flash when the turn signal lamps are working.

After resetting the steering wheel, the lever will be automatically reset to the middle position, and the turn signal lamp goes off. But if the steering wheel angle is small, manually reset the lever to turn off the turn signal lamps.

If the light lever switch is moved at a small angle, it will reset immediately. The turn signal lamp and direction indicator lamp will flash three times and then go out automatically.

Rear Fog Lamps

Fog lights should only be used when visibilityis below 100m - other road users could be dazzled in clear conditions.

When the vehicle is powered on and the low beams are on, tap the rear fog lamp switch on the top left of the entertainment display to turn on the rear fog lamps. With rear fog lamps on, the indicator on the instrument panel illuminates.

Hazard Warning Lamps

The hazard warning lamp button is located in the centre of the A/C control panel. Press the hazard warning lamp button ⚠ to turn on the hazard warning lamps. All turn signal lamps and direction indicator lamps will flash together. Press the button again to switch off the hazard warning lamp. All turn signal lamps and direction indicator lamps will stop flashing.

Wipers and Washers

Front Windscreen Wiper and Washer Operation

When the vehicle is powered on, operate the lever switch to select different wiping modes.

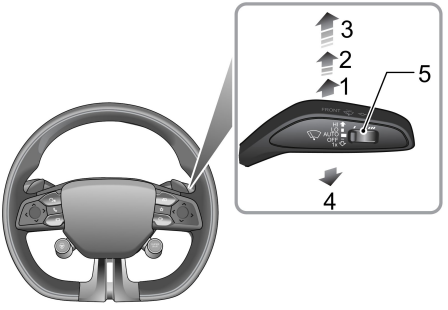

- AUTO: Automatic wipe (1)
- LO: Slow speed wipe (2)
- HI: Fast speed wipe (3)
- OFF: Wiper off (Default position)
- 1x: Single wipe (4)
- Rain sensor sensitivity adjustment (5)

Automatic wipe

By pushing the lever up to the automatic wipe position (1), the wipers will operate automatically.

Turn the switch (5) to adjust the sensitivity of rain sensor. The higher the sensitivity, the shorter the wiping interval. Rain sensor is equipped in the interior rearview mirror base to detect varying amounts of water outside of the windscreen. With automatic wipe, the vehicle will adjust the wiping speed according to the signals provided by rain sensor.

Note: When the sensitivity of rain sensor is increased, the wiper will wipe once immediately; if the rain sensor detects continuous rainwater, the wiper will keep working. When no rain is detected, it is recommended to switch off automatic wipe.

Slow speed wipe

By pushing the lever up to the slow speed wipe position (2), the wipers will operate slowly.

Fast speed wipe

By pushing the lever up to the fast speed wipe position (3), the wipers will operate at fast speed.

Single wipe

Pressing the lever down to single wipe position (4) and releasing will operate a single wipe. If the lever is held in the single wipe position (4), the wiper will operate continuously until the lever is released.

Note: When the car is stationary, if the bonnet is opened, the front wiper/washer operation will be disabled.

IMPORTANT
• Avoid operating the wipers on a dry windscreen. • In freezing or extremely hot conditions, make sure that the wiper blades are not frozen or adhered to the windscreen. • In winter, remove snow or ice from around the wiper arms and blades, including the wiped area of the screen.

Windscreen Wash and Wipe

Pulling the lever toward the steering wheel will operate the front windscreen washers. After a short delay, the wipers will commence operating in conjunction with the washers.

Note: The wipers continue operating for three wipes after the lever switch is released. After several seconds, there will be a further wipe to remove any washer fluid from the windscreen.

IMPORTANT
If the washers fail to deliver the screen wash solution (dirt or ice may have blocked the jets),release the lever immediately.This will prevent the wipers from operating,and the consequent risk of visibility being impaired by dirt smearing across the unwashed windscreen.

Steering System

All models of this series are equipped with electric power steering function. The function works only after the vehicle is started.

IMPORTANT
If the EPS fails, the steering may appear very heavy, which significantly affects driving safety!

Steering Wheel Position Adjustment

DO NOT attempt to adjust the position of the steering wheel while the car is in motion. This is extremely dangerous.

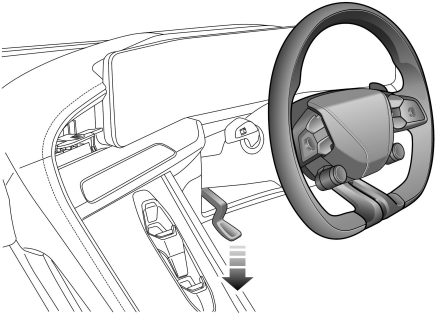

Adjust the position of the steering wheel to suit driving posture:

1 Fully release the locking lever (as arrowed).

2 Hold the steering wheel with both hands and tilt the steering column up or down to adjust the steering wheel height; push and pull the steering wheel to adjust the distance between the steering wheel and the driver.

3 Once a comfortable driving position has been selected, pull the locking lever fully up to lock the steering wheel into its new position.

Steering Feel

When the driver carries a valid key, opens the driver door, and sits in the driver seat, the instrument pack and entertainment display will be powered on. At this time, the Steering Feel could be adjusted via entertainment display - “Vehicle” - “Driving Control” - “Steering” interface, and set and switch the mode as needed.

1 Light: provides high steering power, with a lightsome feel.

2 Standard: provides moderate steering power, with a moderate feel.

3 Heavy: provides low steering power, with a steady feel.

IMPORTANT
Holding the steering wheel on full lock for long periods will result in a reduction in power assistance causing a heavier feel to the steering.

Electric Power Assisted Steering (EPS) Warning Lamp

Refer to "Warning Lamps and Indicators".

If the battery cable has been disconnected for any reason, upon reconnection the warning lamp will illuminate yellow. Movement of the steering wheel from lock to lock will initialise the system and the lamp will extinguish.

Horn

Press the horn button area on the steering wheel (as indicated by the arrow) to operate the horn.

Note: The vehicle horn button areas and the driver's airbag are located in close proximity on the steering wheel. The illustration shows the position of the horn (indicated by arrow). Please ensure that you press in this area to avoid any potential conflict with the operation of the airbag.

IMPORTANT
To avoid possible SRS issues, please do not press with excessive force or hit the airbag cover when operating the horn.

Rearview Mirrors

The rearview mirrors consist of exterior rearview mirrors in the front of the vehicle on the left and right sides and interior rearview mirrors in the front of passenger compartment. They are used to reflect the situations behind or on both sides of the vehicle, thus expanding the driver's field of view.

The rearview mirrors are safety-critical parts. Proper use and reasonable mirror angle adjustment can improve the driver's driving safety and comfort.

Exterior Rearview Mirrors

The exterior rearview mirrors, as the widest parts mounted on the vehicle, are especially vulnerable in the collision event. The exterior rearview mirrors feature a manual or electric folding function, this helps avoid damage and allows folding when manoeuvring through narrow passages.

In addition to the folding function, each exterior rearview mirror features electric angle adjustment and heating elements, which can effectively remove frost or mist on the mirror.

Note: The vehicles or objects behind viewed in exterior rearview mirrors may appear further away than they actually are.

Power Folding

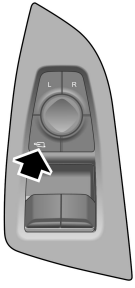

Press the button (arrowed) on the combination switch at driver side, the exterior rearview mirror will be electrically folded. Pushing the button again will return the mirrors to their original position.

While unlocking/locking the vehicle, the exterior rearview mirrors will be deployed/folded automatically. This function can be set in the relevant interface in "Vehicle Settings" on the entertainment display.

Note: While unlocking/locking the vehicle, the exterior rearview mirrors will be deployed/folded automatically.

Note: For vehicles equipped with power folding exterior rearview mirrors, if the exterior mirror deviates from original position due to human or other factors, it can restore to the original position by operating the folding switch to make the exterior mirror fold and deploy once.

Electric Adjustment of Exterior Rearview Mirrors

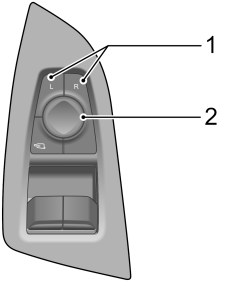

- Press the left (L) or right (R) switch (1) to select the left or right exterior rearview mirror. Meanwhile, the indicator lamps on selected switch will illuminate.
- Press 4 arrows of the circular switch (2) to adjust the angle of the exterior rearview mirror.
- Press the L or R switch (1) again, the corresponding indicator lamp extinguishes, and the mirror adjustment

operation can be stopped to avoid accidental adjustment of mirror angle which has been adjusted.

Mirror Glass Heating

The exterior rearview mirrors have integral heating elements which can disperse frost or mist from the glass.

The heating elements operate while the Heated Rear Window is switched on, that is, only when the vehicle is powered on, and the heated rear window is turned on, the heating function of the exterior rearview mirrors will work.

IMPORTANT
• The electric adjustment and regulation of mirrors are operated using the electric switch, operating them directly by hand may result in the failure of related devices. • Washing or flushing door mirrors with high pressure water jets or car washes may result in electrical motor failure.

Interior Rearview Mirrors

Adjust the body of the interior rearview mirror to achieve the best possible view. The anti-dazzle function of the interior rearview mirror helps reduce glare from the headlamps of following vehicles at night.

Manual Anti-dazzle Interior Rearview Mirror

Move the lever at the base of the interior rearview mirror to change its angle, so as to achieve the anti-dazzle function. Normal visibility is restored by pulling the lever back again.

Note: In some circumstances, using the manual anti-dazzle function of the interior rearview mirror can confuse the driver as to the precise location of following vehicles.

Sunvisor

For safety reasons, do not use the driver's vanity mirror while driving.

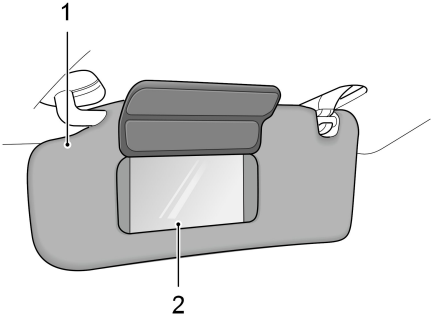

Sunvisor (1) and vanity mirror (2) are arranged on the roof ahead of both the driver and the front passenger.

Pull the sunvisor downward to use the vanity mirror.

Windows

Please correctly operate the windows to avoid danger. The driver shall instruct passengers on how to use windows and tell them safety precautions.

Ensure children are kept clear when raising or lowering a window.

DO NOT operate the power window controls continuously several times in a short time frame, otherwise the power window controls may be disabled to protect the motor. If this occurs, please wait a few seconds until the motor cools down. Do not disconnect negative battery during the time.

There is a risk of high temperature burns and even life safety for Auto Window Close When Locking. When this function is activated, ensure that the occupants, especially children, have left the vehicle.

Power Operated Window Switch

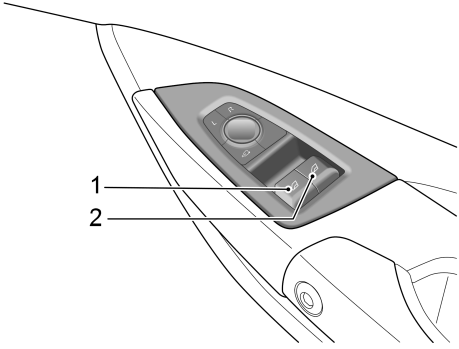

1 Left Window Control Switch

2 Right Window Control Switch

Window Operation

The electric windows can be operated after the vehicle is powered on (Doors should be closed during operation).

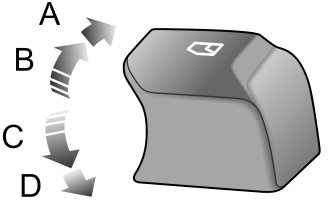

Press the window control switch (1 ~ 2) down to the 1st gear (Position C) to lower the window, and pull the switch up to the 1st gear (Position B) to raise the window. The window will stop moving as soon as the switch is released.

"One-touch" Down

Press the window control switch (1 ~ 2) down to the 2nd gear (Position D) and release, the window automatically descends to fully open. Window movement can be stopped at any time by operating the corresponding switch again during descent.

"One-touch" Up and "Anti-pinch"

Lift the window control switch (1 ~ 2) to the 2nd gear (Position A) and release it, the windows automatically rise to fully close. Window movement can be stopped at any time by briefly operating the switch again during ascent.

The "Anti-pinch" function is a safety feature which prevents the window from ascending and descends automatically a certain distance if an obstacle is sensed, then you can remove the obstacle.

Note: If the battery is powered off during the lifting process of window, the "one-touch" up and "anti-pinch" mode will be disabled. After the battery is powered on again, the window can be raised to the top by lifting the switch briefly and continuously for about 5 seconds, the window will resume the "one-touch" up and "anti-pinch" mode.

Note: If the vehicle is powered off, please realize short window down with the window control button within 30 seconds to avoid affecting the door opening.

Auto Window Close When Locking

When the vehicle is powered off and the doors are closed, press the lock button on the key to lock the vehicle and the window will automatically raise the windows to fully close. This function can be set in the "Vehicle Settings" interface on the entertainment display.

Interior Lighting

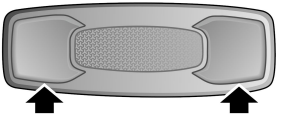

Press one of the buttons as shown to turn the corresponding courtesy light on, and press again to turn it off.

Note: If a door is open for more than a certain period of time, the front interior lamp will be switched off automatically to avoid battery drain. In case of low battery, the courtesy light will extinguish earlier.

Convertible Soft Top

Please operate the convertible soft top correctly to avoid danger. The driver shall instruct the occupants on the use of the convertible and safety precautions.

When operating the convertible soft top, ensure the safety of occupants, especially the children; DO NOT put limbs or items in the moving area of the convertible, so as to prevent pinching by the convertible.

When opening the convertible soft top, please pay attention to the surrounding environment to avoid personal injuries caused by flying objects or tree branches.

Unless necessary (the convertible should be closed manually), do not apply external force to the soft top side cover when opening the convertible to avoid pinching and structural damage.

Instructions for Use

Some vehicles of this model are equipped with a foldable soft-top convertible, which has simple and beautiful appearance. After folded, it can break the closed space of the cockpit, expand the field of view, and increase driving pleasure while improving riding comfort.

Note: DO NOT place heavy objects on or around the convertible soft top.

Note: After parking, ensure that the convertible has been closed to avoid vehicle theft.

Note: Pay attention to the safety of personal property and do not place valuables in the cockpit.

Note: After the convertible is opened, do not set the A/C temperature too low to avoid condensate accumulation and dripping.

- Operate the convertible when the vehicle speed is less than 50km/h ;
- Before operating the convertible, ensure that the windows can move up and down automatically;
- Operate the convertible in an environment above -10°C ;
- Operate the convertible on a flat ground;
- Do not operate the convertible in a low space such as stereo garages;

- If the soft-top outer tarpaulin gets wet, fully unfold and dry the convertible.

Electric Operation of Convertible

The convertible can be operated when the vehicle is powered on.

The buttons for opening and closing the soft-top convertible are located on the centre console.

When pulling and holding the switch, the window moves down and the convertible is opened.

When pressing and holding the switch, the window glass moves down and the convertible is closed. After it is fully closed, the window glass moves up again.

Note: When closing the convertible, opening the door can stop its movement.

Note: Please ensure that the convertible is fully opened or closed. If it is stopped during movement, you can open or close it by continuing to pull or press the switch.

Thermal Protection

To prevent the convertible soft top motor from damage due to overheating, it is provided with thermal protection function. When overheating, wait for a while before operating the convertible soft top.

Manual Operation of Convertible

When the vehicle fails and the convertible cannot be closed electrically, the soft-top convertible can be closed manually by two persons.

If possible, please go to an MG Authorised Repairer to have the convertible closed manually by a professional.

Before Closing

1 Fully lower the windows on both sides.

2 Power off the vehicle.

Lift out the convertible.

1 Turn over the convertible side covers.

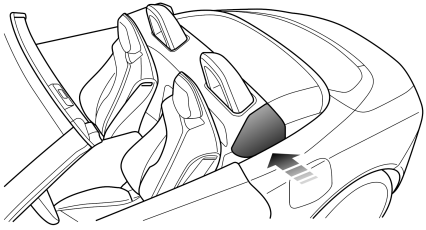

2 Place the hexagon wrench in the screws.

3 Turn the screws on the left of the vehicle by 180° counterclockwise until the limit position. Turn the screws on the right by 180° clockwise until the limit position. The convertible has been switched from Electric mode to Manual mode.

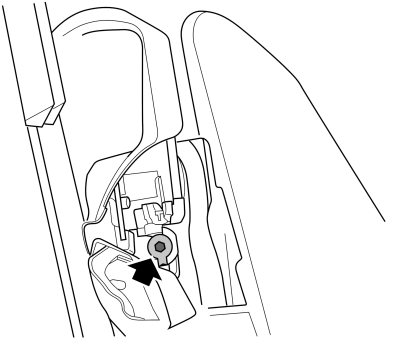

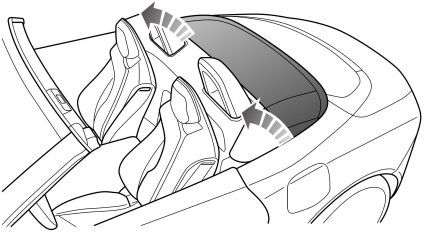

4 Lift the convertible out from both sides and flip it forward.

Convertible Locking

1 Remove the front centre cover of the convertible.

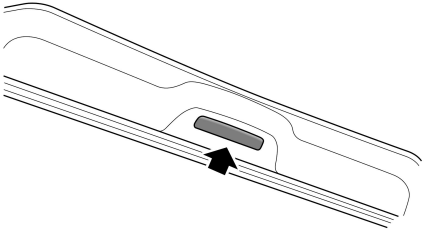

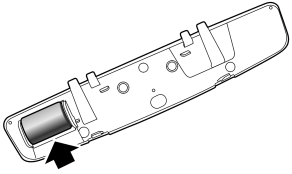

2 Remove the female square adapter from the cover.

3 Insert the female square adapter onto the hexagon wrench.

4 Place the hexagon wrench on the convertible locking device.

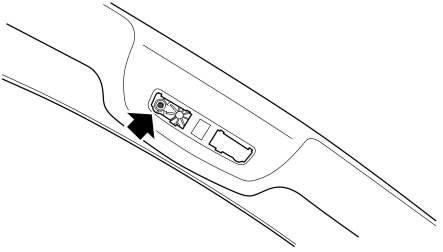

5 One person presses the front of the convertible so that it is closely attached to the windscreen. The other person turns the wrench to left until the limit position to close the latch.

6 Check that the convertible is locked.

Convertible Maintenance

The appearance and service life of the convertible depend largely on proper maintenance and operation.

1 When cleaning the convertible, use a soft microfibre cloth.

2 Do not get the convertible fully wet.

3 When parking, try to park in a shaded area and avoid direct sunlight.

4 Clean bird droppings, etc. from the convertible tarpaulin, which are corrosive and may damage the convertible in the long run.

Power Socket

Using the power socket or USB port when the vehicle is not started will cause premature discharging of the vehicle battery, and prolonged use may cause flat battery, thus the vehicle cannot be started.

Front USB Port

The front USB port is located at the front of the centre console. When the vehicle is powered on, it can provide 5 V voltage as a power outlet.

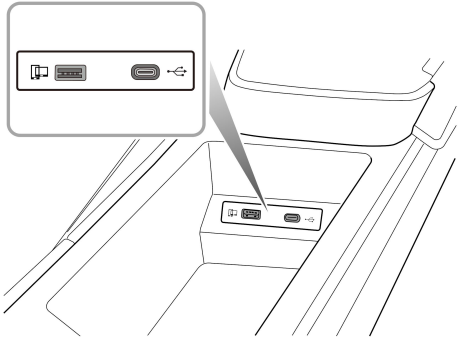

The maximum operating current of the left USB port is 1.5 A, and the maximum operating current of the right USB port is 1.5 A as shown.

The USB ports on both sides as shown can also transmit data. The USB port on the left as shown can also realize the vehicle-mobile phone interconnection.

Note: The vehicle's USB ports may not support some fast charging devices.

Trunk Power Socket

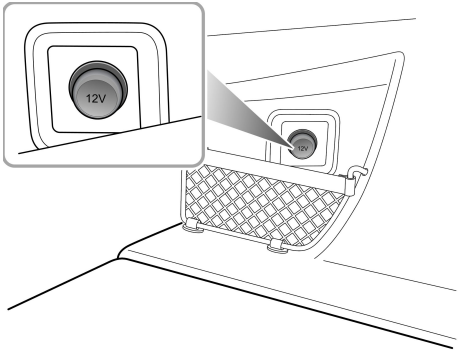

The trunk power socket is located on the right of the trunk. Its maximum operating voltage is 12 V, and its maximum power is 120 W. When the vehicle is powered on, it can be used as power source after opening the cover.

Alcolock *

The alcolock is only a detector to assist in restricting the driver from driving when the alcohol concentration exceeds the legal limit. However, remember that you are always the first person responsible for road traffic safety. For the safety of you and other traffic participants, drunk driving is strictly prohibited!

After fitting the alcolock, you should take the handheld device and exhale to detect the alcohol concentration before starting the vehicle. When you pass the test, the vehicle can be started.

Note: The handheld device shall be placed in a position that is easily accessible and does not affect driving. Please contact a local Authorised Repairer to help you fit and debug the alcolock.

IMPORTANT
If you fail the alcohol test, do not attempt to start the vehicle forcibly for your safety. If you suspect that the alcolock fails, please contact a local Authorised Repairer

Storage Devices

Instructions for Use

- Please close all storage devices when the vehicle is in motion, to avoid personal injuries in cases of a harsh acceleration, emergency braking and a car accident during driving.
- Do not place flammable materials such as liquid or lighters in any storage devices to avoid heat in hot conditions from igniting flammable materials and leading to a fire.

Glove Box

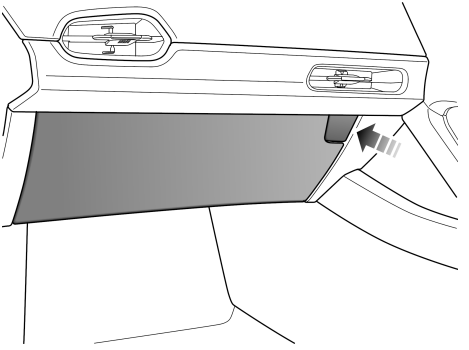

To open the glove box, press the glove box release button (as indicated by the arrow). The glove box light will automatically illuminate.

Push the lid forward to close the glove box. Make sure the glove box is fully closed when the vehicle is driving.

Storage Box

Centre Console Armrest Box

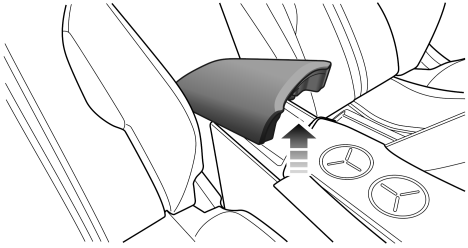

Lift the centre console armrest (as indicated by the arrow) to open the centre console armrest box. Exert little force to put down the centre console armrest to close the centre console armrest box.

Cup Holder

Do not place hot drinks in the cup holder whilst driving. Spillage may result in scald or other unnecessary damage.

Centre Console Cup Holder

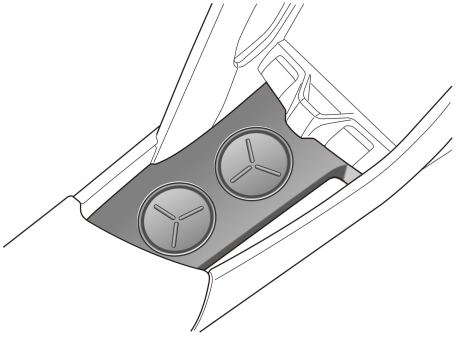

The centre console cup holder is located in the front of the centre console armrest assembly, and is used to hold a cup or beverage bottle.

Air Conditioning System

Ventilation *78*

A/C Control Panel *81*

Ventilation

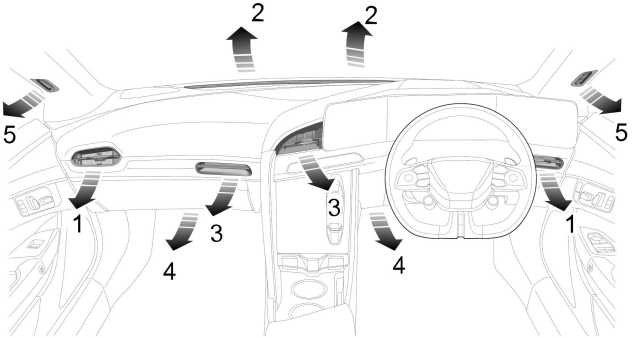

1 Side Vents
2 Front Windscreen Vents
3 Centre Vents
4 Front Seat Feet Vents
5 Front Window Side Vents

The A/C system is used to adjust the temperature, speed, humidity and cleanness of the air inside the car. Fresh air is drawn in through the air intake grille under the windscreen after filtered by the A/C filter element. Always keep the air intake grille clear of obstructions such as leaves, snow or ice.

A/C Filter Element

The A/C filter element is used to filter the air. To remain fully effective, the filter element should be replaced at the recommended service interval.

Vents

Regulation of Centre Vents

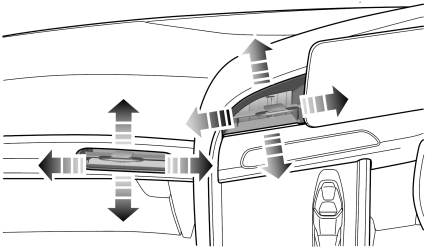

Toggle the knob in the centre of the louvres from side to side to open or close the vent. Direct the air flow by moving the knob up and down, or from side to side.

Regulation of Side Vents

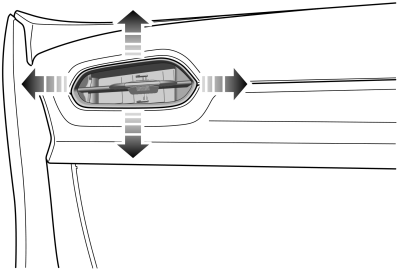

Toggle the knob in the centre of the louvres from side to side to open or close the vent. Direct the air flow by moving the knob up and down, or from side to side.

A/C Control Panel

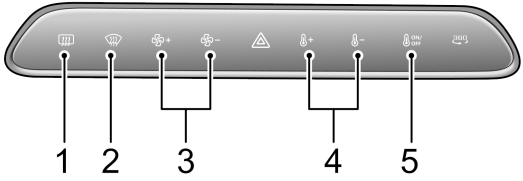

1 Exterior Rearview Mirror and Rear Window Heating
2 Defrost/Demist
3 Blower Speed Control
4 Temperature Control
5 A/C System Switch

Seats and Restraints

Seats 84

Memory Seat 86

Seat Belt 87

Airbag Supplementary Restraint System 96

*Active Pedestrian Protection System ** 106

Seats

Power Seat

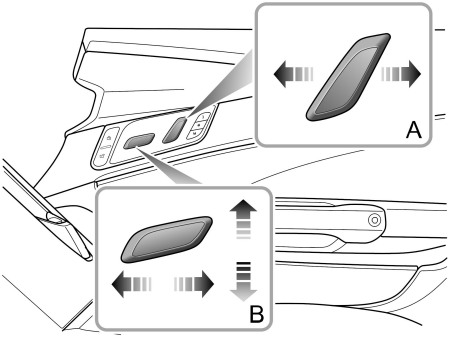

- Backrest angle adjustment (A)
- Seat cushion adjustment (B)

Seat Heating Function

If bare skin is in contact with the heated seats for excessive periods of time, it may cause burns.

The front seat heater of this vehicle can be adjusted to three temperature levels, and the seat heater switch is located on the A/C Control interface of the entertainment display. After the vehicle is started, the heating function of the corresponding seat can be turned on or off on

the A/C Control interface of the entertainment display, and the heating levels can be adjusted. When the seat cushion temperature reaches approximately 38 °C or the backrest temperature reaches approximately 40 °C, the heating function will be deactivated automatically.

IMPORTANT
• Do not cover the heated seats with blankets, cushions or other insulation type objects or materials. • When the seat with seat heating function exceeds a certain temperature and continues getting hotter, please turn off the seat heating switch and contact an MG Authorised Repairer for inspection and service. • Overuse of the driver's heated seat may cause drowsiness and could affect safety.

Memory Seat

Personalized Setting of Seat Position (With the driver side as an example)

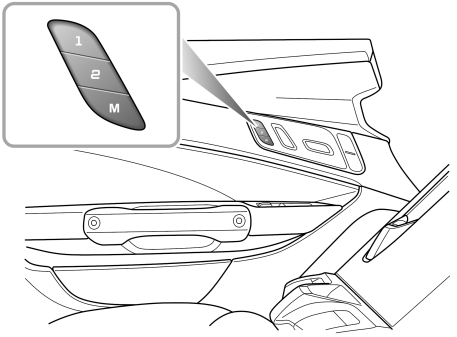

For vehicles provided with the memory function, more extensive personalized settings for driving can be made, i.e., matching the comfort level of the driver seat (seat cushion height, seat fore and aft position, seat back tilt angle, etc.). These personalized settings can be done by operating the switch located on the door (as shown), which can store personalized settings information for up to 2 drivers.

For safety, set the seat position memory function with the vehicle not started and the doors closed. The setting methods are as follows:

1 Adjust the position and angle of the driver seat separately, and then adjust the exterior rearview mirror angle (refer to "Rearview Mirrors" in "Instrument and Control" chapter for details).

2 Press the M button, and then press the numeric button 1 within 10 seconds after releasing it to save the current driver's driving position into button 1 .

Repeat the above steps for the second driver to store the personalized position setting in button 2 .

To recall a set seat memory position, long press the corresponding numeric button to do so.

Note: If an object blocks the driver seat when the memory position is recalled, the function will stop working. If this happens, try to recall the memorized position again by pressing the appropriate memory button after clearing the obstacle.

Seat Belt

It is important that all seat belts are worn correctly. Always check that all passengers are wearing seat belts. DO NOT carry passengers that are unable to wear correctly positioned seat belts. Wearing seat belts incorrectly may cause serious injury or even death in the event of a collision.

Seat belts cannot function correctly when the seats are reclined excessively. DO NOT drive when the seats are excessively reclined.

NEVER unfasten a seat belt whilst driving, serious injury or death may occur in the event of an accident or emergency braking.

Never fasten the driver seat belt or use a buckle replacement when the driver seat is vacant or when exiting the vehicle.

This vehicle is equipped with seat belt warning lamp to remind you to fasten your seat belt. Refer to "Warning Lamps and Indicators" in "Instruments and Controls" section for details.

When the vehicle is moving, seat belts must be fastened for all occupants. Because:

- You can never predict if you will be involved in a collision accident and how serious it may be.
- In the event of a collision or emergency braking, the seat belts will automatically lock. When the seat belt is worn correctly, the strongest bone in your body will bear the impact force to reduce your speed together with the vehicle, so as to prevent the out-of-control movement which may cause serious injury to driver and passengers.
- The force generated by a low-speed collision cannot be supported by arms and hands even in a minor traffic accident.
- The experience has clearly demonstrated that whether the occupant is effectively protected has a lot to do with whether the seat belt is properly worn or not in many collision accidents!

Protection Provided by Seat Belts

Note: Never fasten the driver seat belt or use a buckle replacement when the driver seat is vacant or when exiting the vehicle.

When the vehicle is in motion, the travelling speed of the occupants is identical to that of the vehicle. In the event of a 'head on collision' or emergency braking, the vehicle may stop, but the occupants will carry on travelling until they come into contact with a stationary object. This object may be the steering wheel, dashboard, windscreen and others. A correctly fastened seat belt will eliminate this risk of injury.

When the seat belt is worn correctly, it will lock automatically in collision accidents or emergency braking to reduce your speed together with the vehicle, so as to prevent the out-of-control movement which may cause serious injury to driver and passengers. Under the protection of seat belt, you will have longer distance and more time to stop moving, and the strongest bone in your body will bear the impact force. That is why it is important to fasten the seat belt correctly.

When minor traffic accident occurs, trying to shore up your body with arms is very dangerous. Even the low speed collision will generate force that arms and hands can not support, therefore, seat belts must be worn correctly during driving.

How to Wear Seat Belts Properly

Incorrectly worn seat belts could cause injury or death in the event of an accident. Seat belts are designed for one person, DO NOT share seat belts.

DO NOT wrap a seat belt around when holding a baby or child in your arms.

Remove any heavy coats or clothing when wearing a seat belt, failure to do so can affect protection provided by the seat belt.

Seat belts should not be wrapped around hard or sharp objects such as pens, spectacles or keys.

Seat belts cannot function correctly when the seats are reclined excessively. DO NOT drive when the seats are excessively reclined.

The seat belts fitted to your vehicle are designed for use by normal sized adults. This part of the literature refers to adult use. For advice on seat belt use with children, please see 'How Children Use Seat Belts'.

In order to maintain effective protection, the passengers must sit in the correct orientation, placing feet on the floor in front of them, with an upright body (no excessive recline) and the seat belt correctly fastened.

Lap-shoulder Belts

All seat belts fitted on this vehicle are lap-shoulder belts, which shall be used properly as follows.

1 Hold the metal tab, pull the seat belt out steadily over the shoulder and across your chest. Ensure there is no twist on the belt.

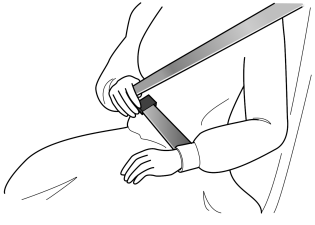

2 Insert the metal tab into the buckle until you hear a 'click', this indicates the seat belt is securely locked.

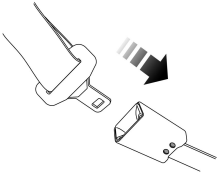

3 Pull the shoulder belt upward and tighten up the lap belt.

4 To release the seat belt, press the red button on the buckle, and the metal tab of the seat belt will automatically pop out. When the seat belt is unfastened, the metal tab will retract automatically to its original position.

Correct Routing of the Seat Belts

Ensure the seat belt is correctly positioned on the body, NEVER cross the neck or abdomen, NEVER pass the seat belt behind the back or under the arms.

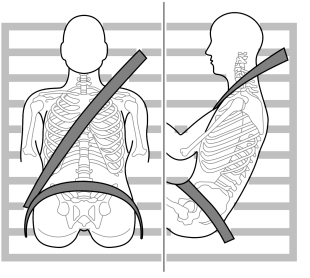

When wearing seat belts, the lap belt section should be positioned as low as possible across your hips (Never cross the abdomen), so that in a collision accident, the lap belt can apply force to the firm hips, reduce the possibility of body moving under the lap belt, and maximize the protection for passengers against injury. This is because if

the accident occurs, the body moves under the lap belt, causing the lap belt to apply force on abdomen, which may cause serious or fatal injuries. The diagonal section of the belt should cross the middle of the shoulder and the chest. Never cross your neck, arms, or cross under your arms or behind your back. In the event of emergency braking or collision, the diagonal section of the belt will be locked.

To ensure that the seat belts always provide maximum protection, ensure the belt is flat, not loose and contacts the body. Adjust seat belt to ensure it is not loose.

Seat Belt Use during Pregnancy

During the whole pregnancy, the pregnant woman shall wear the lap - shoulder seat belt correctly. The diagonal section of the seat belt should pass across the chest as normal. The lap section of the belt should pass below the belly, low and snug on the hip bones. NEVER position the belt on or above the belly. Wearing correctly positioned seat belts will provide protection for both mother and unborn child in the event of a collision or emergency braking.

Please consult your physician for further details.

Seat Belt Use for Disabilities

It is a legal requirement that all occupants wear seat belts, this include people with disabilities.

Please consult your physician for further details.

Seat Belt Pre-tensioners

The seat belt pre-tensioners will only be activated once and then MUST BE REPLACED. Failure to replace the pre-tensioners will reduce the efficiency of the vehicle's restraint system.

If the pre-tensioners have been activated, the seat belts will still function as restraints, and must be worn in the event that the vehicle remains in a drivable condition. The seat belt pre-tensioners should be replaced at the earliest opportunity by an MG Authorised Repairer.

The vehicle is fitted with seat belt pre-tensioners beside some seat belt retractors. When medium or severe frontal collision occurs and meets the condition to activate the pre-tensioner, it will help to secure the seat belt to reduce passengers moving forward.

The airbag warning lamp on the instrument pack will alert the driver to any malfunction of the seat belt pre-tensioners (see 'Warning Lamps and Indicators' in the 'Instruments and Controls' chapter).

The seat belt pre-tensioners can only be activated once. After activation in a collision, they must be replaced. This may also involve replacement of other SRS components. Please refer to 'Replacement of SRS Components' in 'Airbags' of this section.

IMPORTANT
• Seat belt pre-tensioners will not be activated by minor impacts. • The removal or replacement of a pre-tensioner must be carried out by the manufacturer trained dealer technicians. For better guarantee of your safety, we recommend you to consult an MG Authorised Repairer. • After 10 years from the use of vehicle (or replacement of seat belt pre-tensioner), it is recommended to replace related components to guarantee your safety. If you have any doubt about the device within this period, we recommend you consult an MG Authorised Repairer.

Seat Belt Checks, Maintenance and Replacement

Seat Belt Checks

Split, worn or frayed seat belts may not function correctly in the event of a collision, if there are any signs of damage, replace the belt immediately.

Always ensure the red release button on the seat belt buckle is pointing upwards ensure easy release in the event of an emergency.

Please follow the instructions below to check the seat belt warning lamp, seat belt, metal tab, buckle, retractor and fixing device regularly:

- Insert the seat belt metal tab into the corresponding buckle and pull seat belt webbing close to the buckle quickly to check that the belt clasp locks.
- Hold the metal tab and pull the seat belt forward quickly to check that the seat belt reel locks automatically, preventing the webbing from extending.
- Fully extract the seat belt and visibly examine for twists, fraying, splits or worn areas.
- Retract the seat belt and allow to return slowly to ensure continual and complete smooth operation.
- Visibly examine the seat belt for missing or broken components or components that may affect the normal operation.
- Ensure the seat belt warning system is fully functional.

If the seat belt fails to pass any one of above checks, please contact an MG Authorised Repairer for repair.

Seat Belt Maintenance

Seat belt repairs and removal should only be carried out by an MG Authorised Repairer. The repair of a seat belt component must be carried out by the manufacturer trained, dealer technicians. In the event of accidents, improper maintenance may cause seat belt pre-tensioners not to be activated normally to increase accident injury risk. For better guarantee of your safety, we recommend you to consult an MG Authorised Repairer.

Ensure no foreign or sharp objects become lodged in the seat belt mechanisms. DO NOT allow liquids to contaminate the seat belt buckle, this could affect the buckle engagement.

Seat belts should only be cleaned with warm soapy water. Do not use any solvent to clean the seat belt. Do not attempt to bleach or dye the seat belt, otherwise the strength of the seat belt will be severely weakened. After cleaning, wipe with a cloth and allow to dry. Do not allow the seat belt to fully retract before it is completely dry. Keep seat belts clean and dry.

If there are contaminants accumulated in the retractor, the retraction of seat belt will be slow. Please use a clean and dry cloth to remove any contaminants.

Seat Belt Replacement

Collision accidents may damage the seat belt system. The seat belt system may not be able to protect users after damage, which may result in serious injury or even death. After an accident, seat belts should be checked and replaced as needed immediately.

Seat belts may not require change after minor collisions. However, some other parts of the seat belt system, like metal tab, buckle, retractor, etc, may be deformed or damaged in the collision. Please go to an MG Authorised Repairer for repair or replacement of seat belt assembly.

Airbag Supplementary Restraint System

Overview

The airbag SRS provides ADDITIONAL protection in a severe frontal impact only. It does not replace the need, or requirement to wear a seat belt.

The airbags together with the seat belts provide optimum protection for adults, but it is not the case for infants. The seat belt and airbag systems in the vehicle are not designed for protecting infants. The protection required by infants should be provided by child restraints.

In the corresponding place where airbags are fitted, there is a warning sign stating ' AIRBAG '. Generally, SRS contains the following components (the components are not completely the same according to different model and configuration):

- Front airbags (fitted in the centre part of the steering wheel and the instrument panel above the glove box respectively)
- Side airbags (fitted in the outer seatback cushion of the two front seats)

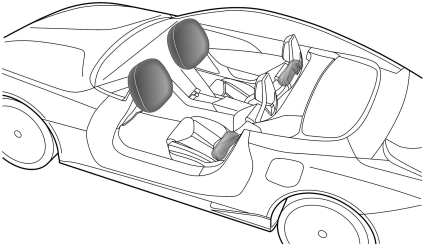

Airbag Warning Lamp

The airbag warning lamp is located in the instrument pack, if this lamp illuminates during driving,

it indicates a SRS fault or seat belt pre-tensioner fault has been detected. Seek an MG Authorised Repairer immediately. Otherwise there may be the risk that the SRS or the seat belt pre-tensioner cannot work properly in the event of a collision. This vehicle is equipped with airbag warning lamp to remind you of the state of the security system. Refer to "Warning Lamps and Indicators" in "Instruments and Controls" section for details.

Airbag Deployment

Front seat passengers should not place feet, knees or any other part of the body in contact with, or in close proximity to a front airbag.

To minimise the risk of accidental injury from inflating airbags, seat belts should be worn correctly at all times. Driver and front passenger must take correct sitting posture and adjust their seat to keep sufficient distance from front airbags, so as to avoid serious injury or death caused by deployed airbags. If side airbags are fitted, both driver and front passenger should be seated to maintain sufficient distance from the upper part of the body to the sides of the vehicle, this will ensure maximum protection when the side airbags are deployed.

An inflating airbag can cause facial abrasions and other injuries if the occupant is too close to the airbag at the time of its deployment.

When airbags are deployed, children without proper protection may suffer from serious injury or even death. DO NOT carry children in the arms or on the knees during traveling. Children should wear seat belts suitable to age. DO NOT lean out of windows.

After deployment, the relative airbag components will become very hot, such as the steering wheel, instrument panel and both sides of the roof rails . DO NOT touch any airbag related components after airbag deployment, it may cause burns or serious injury.

DO NOT knock or strike the position where any airbag related parts are located, so as to avoid accidental airbag deployment which may cause serious injury or even death.

DO NOT affix or place any objects on, or adjacent to the airbags. This may affect the airbag passage or create projectiles that may cause injury or serious harm in the event of airbag deployment

In the event of a collision, the airbag control unit monitors the rate of deceleration or acceleration induced by the collision, to determine whether the airbags should be deployed. Airbag deployment is virtually instantaneous and occurs with considerable force, accompanied by a loud noise.

In the event of a severe frontal collision, a completely deployed airbag, along with a correctly worn seat belt, can limit the movement of the driver and front passenger, reducing the risk of head and chest injuries. For vehicles fitted with side airbags, when the vehicle encounters serious side collision, the completely deployed airbag will form a cushion of air between the occupant and the vehicle side to reduce the risk of body side injuries.

When you sit upright in the seat and against the backrest, seat belts and airbags can provide the most effective protection. When encountering serious collision, airbags will deploy drastically. At this moment, if you or other passengers do not use seat belts properly, and lean forward, recline or sit in other incorrect postures, you or other passengers are likely to suffer from serious injury or fatal injury.

IMPORTANT

- Airbags cannot protect lower body parts of passengers.
- Airbags are not designed for rear collision, minor frontal collision or if the vehicle rolls over, nor will it operate as a result of heavy braking.
- Deployment and deflation of the airbags takes place very quickly and will not protect against the effects of a secondary impact if it occurs.
- When an airbag inflates, a fine powder is released. This is not an indication of a malfunction. However, the powder may cause irritation to the skin and should be thoroughly flushed from the eyes and any cuts or abrasions of the skin. If your skin, eyes, nose or throat etc feels uncomfortable, please consult a doctor.
- After inflation, front and side airbags deflate immediately. This provides a gradual cushioning effect for the occupant and also ensures that the driver's forward vision is not obscured.

Frontal Airbags

NEVER use a rearward facing child restraint on a seat protected by an ACTIVE AIRBAG in front of it, DEATH or SERIOUS INJURY to the CHILD can occur. Refer to 'Disabling the Passenger Airbag'.

Front seat passengers should not place feet, knees or any other part of the body in contact with, or in close proximity to a front airbag.

In extreme cases driving on very uneven surfaces may cause airbag deployment. Please take extra care when driving on uneven roads.

Frontal airbags are designed to deploy during serious frontal impacts or similar impacts. Conditions described below or similar ones may cause airbag deployment.

- A frontal collision with unmovable or non deformable solid objects at a high speed.
- Vehicle chassis are seriously damaged. Conditions that can cause serious chassis damage, such as : a collision with kerbstones, road edges or hard surface; falling into

deep ravines or holes; or hitting the ground violently after jumping up.

Side airbags

The structure and material of the seat is critical to the correct operation of side airbags. Therefore, please DO NOT fit seat covers which may affect side airbag deployment.

In the event of a serious side impact, the relevant front side airbag will pop out from the seat cover and deploy rapidly (only the affected side). The other side will not deploy. Conditions described below or similar ones may cause side airbag deployment.

- One side of the vehicle collides with high-speed ordinary passenger car.

Conditions in Which Airbags Will Not Deploy

The deployment of airbags does not depend on the vehicle speed, but on the object that the vehicle hits, angle of impact and the rate at which the car changes speed as a result of a collision. When the impact force of collision is absorbed or dispersed to vehicle body, airbags may not deploy; however, airbags may sometimes deploy according to impact condition. Therefore, the deployment of airbags shall not be judged based on the severity of vehicle damage.

Frontal Airbags

Under conditions described below or similar ones, the frontal airbags may not be deployed:

- The impact point is not central to the front of the vehicle.
- The impact is with a solid utility pole or traffic sign post.
- Collision with the bottom part of the truck's tail; cut-in collision with trucks or vehicles with a higher chassis.
- Frontal collision at an angle with guard bars.
- Impacts to the rear or side of the vehicle.
- The vehicle rolling over.

Side airbags

Under conditions described below or similar ones, the side airbags may not be deployed.

- Side impacts at certain angles.
- Side impact with motorcycles.
- Point of impact far away from the centre of the vehicle side, such as side impact on the front compartment or trunk.
- The vehicle rolling over.
- Frontal collision at an angle with guard bars.
- Insufficient side impact force (Impact with non-solid objects, such as street light posts and central guardrails).
- Insufficient impact force (Impact with parking or moving vehicles).
- The impact is from the rear of the vehicle.

Front Passenger Airbag Switch*

This switch can be used to deactivate the front passenger side airbag only when a rearward-facing child restraint is installed on the front passenger side seat.

When an adult is seated in the front passenger side seat, please ensure that the front passenger side airbag is switched on.

The front passenger airbag could be activated or deactivated via entertainment display - “Vehicle” - “Convenience” interface.

The enabled or disabled status of the front passenger airbag will be displayed on the entertainment display.

- When the passenger airbag is disabled, the OFF indicator light illuminates.
- When the passenger airbag is enabled, the ON indicator light illuminates for a period of time.

IMPORTANT
• If the OFF and ON indicator lights illuminate together, or the light is inconsistent with the passenger airbag switch position, Please contact an MG Authorised Repairer immediately.

Service and Replacement of Airbags

Service of SRS components

DO NOT install or modify the airbag. Any changes to the vehicle structure or airbag system wiring harness are strictly prohibited.

Changes to vehicle structure is prohibited. This may affect the normal operation of the SRS.

DO NOT allow these areas to be flooded with liquid and DO NOT use petrol, detergent, furniture cream or polishes.

If water enters the vehicle, it may cause damage to the SRS. In this case, even if the collision does not occur, the airbag may accidentally deploy. Immediately cut the power off and disconnect the battery cable; DO NOT try to start the vehicle. Seek an MG Authorised Repairer for service.

If the airbag warning lamp fails to illuminate or remains on, or there is any damage in the front or side of the vehicle and the cover of airbag module has any sign of damage, please go to an MG Authorised repairer to check SRS of the vehicle.

IMPORTANT
• The service of SRS or the steering wheel must be carried out by professionals according to the technical specification and processes of SAIC Motor. For better guarantee of your safety, we recommend you to consult an MG Authorised Repairer. • After 10 years from the use of vehicle (or replacement of an airbag), it is recommended to replace the related components to guarantee your safety. If you have any doubt about the device within this period, we recommend you consult an MG Authorised Repairer.

Replacement of SRS components

Even if the airbag does not deploy, collisions may cause damage to the SRS in the vehicle. Airbags may not function properly after damage, and can not protect you and other passengers when a second collision occurs, which may cause serious injury or even death. To ensure that airbag system can function properly after collision, please go to an MG Authorised Repairer to check airbags and repair as necessary.

Airbags are designed for using once only. Once the airbag is deployed, you must replace the SRS components.

Disposal of Airbags

When your vehicle is sold, ensure that the new owner knows the vehicle is equipped with airbags, and is aware of the replacement date of the SRS. If the vehicle is scrapped, the undeployed airbags may have potential risks, therefore, before the disposal, they must be deployed safely in a certain environment by a professional from the MG Authorised Repairer. Please consult an MG Authorised Repairer for more details.

Active Pedestrian Protection System *

Overview

If APPS warning lamp illuminates, please seek an MG Authorised Repairer immediately.

Removing or refitting APPS and relevant component(front bumper, engine hood) must be carried out by an MG Authorised Repairer.

Your vehicle is equipped with Active Pedestrain Protection System(APPS), if the front of the vehicle collides with the pedestrian at low-speed(15~34mph), the sensor placed in the front bumper will detect the impact, the APPS will lift the engine hood to creat a crumple zone, thereby to minimize the risk of pedestrian injury.

The APPS warning lamp is located in the instrument pack, if this lamp illuminates during driving, it indicates an APPS fault has been detected, please seek an MG Authorised Repairer immediately.

Note: The front of the vehicle collides with other objects(vehicle, roadblock, animal etc.) at low speed may also activate the APPS.

IMPORTANT
• If the APPS is activated, please seek an MG Authorised Repairer immediately for repairing. • The service of APPS must be carried out by professionals according to the technical specification and processes of SAIC Motor. For better guarantee of your safety, we recommend you to consult an MG Authorised Repairer.

Starting and Driving

Keys 108
Anti-theft Systems 112
Starting and Stopping Power System 124
Economical and Environmental Driving 126
Charging and Discharging Requirements 129
Electric Drive Unit 142
One-Pedal Driving Function 145
Driving Mode 146
Energy Regeneration during Coasting 148
Brake System 150
Adaptive Cruise Control (ACC) 159
Driver Assistance System 167
Pedestrian Alert System (PAS) 185
PDC System 186
Rearward Driver Assistance System 189
Tyre Pressure Monitoring System (TPMS) 196
Load Carrying 197

Keys

Overview

Please keep the spare key in a safe place - not in the car!

It is recommended that spare keys are not kept on the same key ring, since this may cause interference and prevent correct key recognition and therefore prevent the correct operation of the vehicle power system.

The smart key contains delicate circuits and must be protected from impact, high temperature, humidity, direct sunlight and fluid corrosion.

WARNING

The keys of vehicle contains coin / button batteries. The battery is HZARDOUS and is to be kept away from children (whether the battery is new or used).

WARNING

A lithium coin / button battery can cause SEVERE or FATAL injuries within 2 hours or less if it is swallowed or placed inside any part of the body.

WARNING

If you think batteries may have been swallowed or placed inside any part of the body, please seek medical rescue immediately.

The smart keys provided to you have been programmed to the security system on your vehicle, any key that is not programmed to the car will not operate the keyless entry function.

The smart key only works within a certain range. It's working range is sometimes influenced by the key battery condition, physical and geographical factors. For safety consideration, after you lock your vehicle by the smart key, please recheck if the vehicle is locked.

Keys

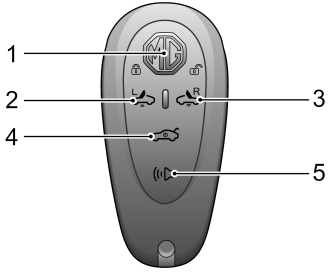

1 Unlock/Lock Button.

2 Left Scissor Door Button: Long press to open/close the left scissor door.

3 Right Scissor Door Button: Long press to open/close the right scissor door.

4 Tailgate Button: Long press to open the tailgate.

5 Find My Car Button: Refer to the function description of "Find My Car" in "Anti-theft Systems".

Note: If the remote key was lost, please contact an MG Authorised Repairer immediately, in case of your vehicle being stolen.

Note: Any key made independently outside of MG Authorised Repairer Network may not start the engine, and may affect the safety of your car. To obtain a suitable key replacement, it is recommended that you can consult an MG Authorised Repairer.

Note: Avoid operating the smart key close to strong radio interference devices (such as notebook computers and other electronic products), the normal function of the key may be affected.

IMPORTANT
When the driver and all passengers leave the vehicle, the smart key must be carried and shall not be left alone in the vehicle.

Replacing the Smart Key Battery

Follow the steps below to replace the smart key battery:

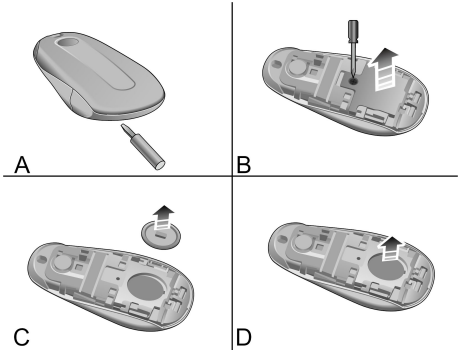

1 Use a tool to pry off the clip and open the lower cover (A).

2 Use a matching screwdriver to unscrew the screws and remove the battery cover (B).

3 Remove the battery waterproof gasket upward (C).

4 Remove the used battery from the slot (D).

5 Place the new battery into the slot, and ensure it is fitted in place.
Note: Make sure that the polarity of battery is correct (positive side downwards).
Note: It is recommended to use a CR2032 battery for the remote key.

6 Fit the battery waterproof gasket.

7 Fit the battery cover and tighten the screws.

8 Fit the rear cover, press it firmly and check for even clearance all around.

9 Check the key functions.

IMPORTANT
• Use of an incorrect or inappropriate battery may damage the smart key. The new battery's rated voltage, sizes and specifications must be the same as the old one. • Incorrect fitting of the battery may damage the key. • Disposal of the used battery must be strictly in accordance with relevant environmental protection acts.

Anti-theft Systems

Your vehicle is fitted with a power immobiliser and a body anti-theft system. To ensure maximum safety and operation convenience, we strongly recommend you to read this section carefully to fully understand the activation and deactivation of anti-theft systems.

Power Immobiliser

The immobiliser is designed to safeguard the vehicle from theft. The vehicle cannot be started until the immobiliser is deactivated.

If the message centre displays "Smart Key Not Found" or "Please Put the Key in Standby Starting Position" or the immobiliser warning lamp illuminates, please put the smart key in the standby starting position (refer to "Standby Starting Procedure" in "Starting and Stopping Power System" section), or try to use the spare key. If the car can still not be started, seek a local Authorised Repairer.

Body Anti-theft System

Locking and Unlocking

When the vehicle is locked, the turn signal lamps illuminate three times; when it is unlocked, the turn signal lamps illuminate once.

Door Lock System Operations (Locking and Unlocking)

Remote Key

Use the key for remote locking/unlocking: After closing the doors, bonnet and tailgate, short press the Lock button to lock the vehicle; short press the Unlock button to unlock the vehicle.

Note: : When the vehicle is locked, press the UNLOCK button on the remote key and perform no other operations within a period of time, and the vehicle will automatically lock.

Find My Car

After the vehicle is locked for several minutes, press the Find My Car button on the smart key for several seconds, the Find My Car function will be enabled, and sound and light indication can be triggered. Pressing this button on

the smart key again to suspend the Find My Car. At this time, press the Unlock button on the smart key to cancel the Find My Car and unlock the vehicle.

Passive Entry

The passive entry system can unlock the doors as long as you carry the smart key and approach the car.

Note: Keep the distance between the remote key and the door handle within 1.5 meters in order to unlock doors in a keyless way.

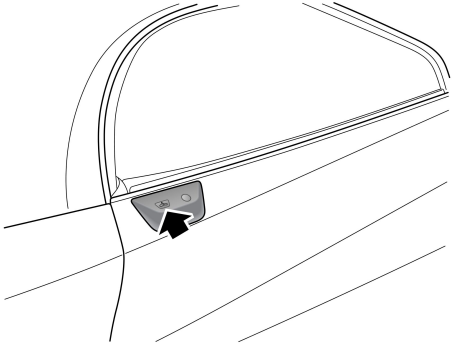

- Unlock: Press the button on the front door to unlock the vehicle.

Mislock

If the driver door is not fully closed, to conduct the locking operation on the vehicle, the door will not be locked, the horn will sound once to indicate mislock, and the body anti-theft system will be inoperative.

If locking operation is performed when the driver's door is closed but the passenger's door, bonnet or tailgate is not fully closed, the vehicle horn will sound once, indicating a mislock. In this case, the 'partial arming' attributes of the body anti-theft system will enable (all fully closed doors, bonnet or tailgate apertures will be protected, but an open aperture will not!). Once the opened door, bonnet or tailgate is closed, the system automatically enters the complete anti-theft state. If the remote key is put back in (or left behind) the vehicle and the opened door is closed, the vehicle will be automatically unlocked.

Smart Key Locked in the Vehicle by Mistake

When a smart key is left in the vehicle and another key is used to lock the vehicle, the function of the smart key

locked in the vehicle to start the vehicle power system will be disabled, and the function to lock and unlock the vehicle will be retained. In this case, the second smart key outside the vehicle can be used to unlock the vehicle, and the starting function of the key inside the vehicle will be automatically restored.

Anti-theft Alarm Sound

If the anti-theft alarm has been activated, before it is turned off, the car horn will sound continuously. Press the Unlock button on the remote key or carry the remote key and press the button on the front door handle to deactivate the anti-theft alarm.

Interior Lock Switch

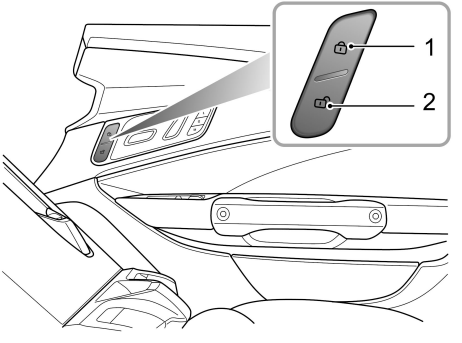

1 Lock Switch

2 Unlock Switch

When the body antitheft system is disabled, press the interior lock Lock switch (2) after closing all doors to lock all doors; press the Unlock switch (1) to unlock all doors.

Note: If the vehicle anti-theft system is set, pressing the lock/unlock switch of interior locks will not lock/unlock doors but will trigger the alarm system.

If the doors, bonnet or tailgate is closed, press the interior lock Lock switch, the yellow indicator on the Lock switch illuminates.

If the non-driver door, bonnet or tailgate is not fully closed, press the interior lock Lock switch, the yellow indicator on the Lock switch flashes.

Auto Lock When Driving

All the doors will be locked automatically when the road speed exceeds 15 km/h.

Electric Opening and Closing of Scissor Door

Under normal circumstances, if the window glass is fully raised, it will drop by a certain distance when the door is opened. This distance is the short down distance of the window glass, and the position of the window glass is the short down position. When the roof is unfolded, if the window glass cannot reach the short down position, the door cannot be opened normally.

The door can be opened or closed by the following ways:

Open/close the door from outside

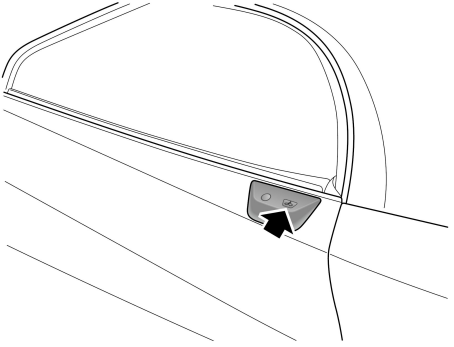

1 Carry a valid key and short press the external door button to automatically open/close the door;

2 While the door is opening/closing, short press the button to stop the door;

3 Press the button again to automatically close/open the door.

Open/close the door from inside

Method 1: Open/close the door with the door trim panel button

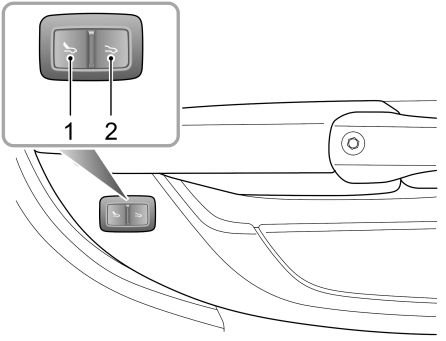

Open:

1 Press the Open button 1 to automatically open the door;

2 While the door is opening, press the Close button 2 to stop the door;

3 Press the button 1 again to continue opening the door.

Close:

1 Press the Close button 2 to automatically close the door;

2 While the door is closing, press the Open button 1 to stop the door;

3 Press the button 2 again to continue closing the door.

Method 2: Open/close the door with the button on the centre console

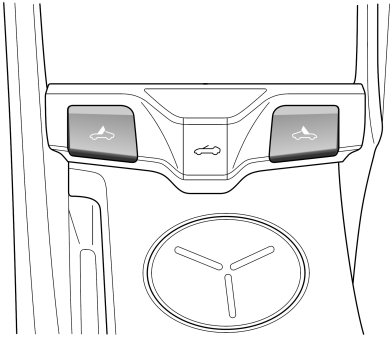

Open:

1 Pull up and release the button on the centre console to automatically open the door;

2 While the door is opening, press the button to stop the door;

3 Pull up the button again to continue opening the door.

Close:

1 Press and release the button on the centre console to automatically close the door;

2 While the door is closing, pull up the button to stop the door;

3 Press the button on the centre console again to continue closing the door.

Scissor Door Opening Angle and Mode Setting

Enter the Door Lock Settings interface on the entertainment display and slide the slider to set the door opening (40%-100%).

The door opening/closing mode can be set at the same time:

1 Auto: With the Auto mode selected, the door can be automatically unlocked and opened when the door is opened as described above.

2 Manual: With the Manual mode selected, the door automatically unlocks when the door is opened as described above, but the door should be opened manually.

Scissor Door Anti-pinch and Monitoring Function

The door has the anti-pinch function when it is electrically closed. If an obstacle (such as school bag strap and other objects with a certain thickness) is encountered when closing, the door will automatically open.

Note: Paper, clothing and other items may not trigger the anti-pinch function, and the door will still close.

IMPORTANT
1 Although the door has the anti-pinch function, the owner still need to ensure that no body parts are in an area where they may be pinched. 2 When the door is closing, do not hinder the closing process artificially, and the door will not automatically stop.

The door has the monitoring function when it is electrically opened, the surface and door opening switch panel are equipped with monitoring radar. If it is detected that an obstacle prevents the door from opening, the door will automatically stop.

IMPORTANT
1 The automatic obstacle avoidance and electrical opening function might be affected when monitoring radar is covered(raindrop, snow, protection cover etc.). You can attempt to open the door manually after the door is unlocked. 2 Please avoid your body part covering monitoring radar when door is electrical openning, in case of affecting openning process. 3 When door is hovering with a relatively small angle, the door will electrical closed in seconds, please be ware of getting pinched.

The monitoring function is an auxiliary function that protects the door while it is opening. However, the owner should observe the surrounding environment even when opening the door:

1 Persons: While the door is opening, anyone should keep a certain distance from the door (stand behind or stay away from the door) to avoid injuries.

2 Parallel vehicles: When parking normally, observe the distance to vehicle on the side and the opening of its doors. If they are open or close to your vehicle, it is recommended to open the scissor door manually.

3 Planar obstacles (walls, etc.): When it is detected that a planar obstacle stops the door, the door opening angle may be small and manual opening/closing is required.

4 Columnar obstacles (garage columns, guardrails, street light posts, etc.): The area in the middle of the door toward the front of the vehicle may not avoid the obstacles; there is a risk of collision at the edge of the door; when the door monitoring identifies a columnar obstacle stopping the door, the door opening angle may be small and manual opening/closing is required.

5 Irregular obstacles (fire hydrants, grid fences, cone-shaped objects, etc.): The door may not detect and identify irregular obstacles. It is recommended to open the door manually when there are irregular obstacles affecting its opening.

6 Low vegetation: There may be inconsistency in the detection and identification of low vegetation by the door, i.e. the door may stop or open when it is opened multiple times at the same location.

7 Stereo garages: It is not recommended to park your vehicle in stereo garages. The top of the window glass may hit the garage.

Note: Please lock the doors before car wash.

Note: The door functions may be limited on extreme slopes.

Note: If the door is opened and closed for several times in a short period of time, the protection mode may be enabled, in which the door cannot be opened and closed electrically, and it may be required to wait for a period of time until the door is restored or opened and closed manually.

Manual Opening of Scissor Door

Manual Door Opening from Inside

The manual switch is located behind the seat.

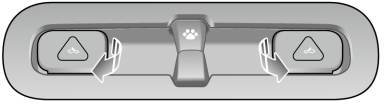

Follow the steps below to open the door:

1 When the window glass is in the short down position or below, pull the switch;

2 Push the door open manually;

3 After the door is opened, pull the switch again to reset the switch for closing the door.

Note: If the door cannot be opened due to the lock blocked, try to pull and keep the switch and then push the door.

Note: When a vehicle equipped with super lock is locked from outside using the remote key, the door cannot be opened through the inner door handle. Do not leave any person or animal inside the vehicle when the vehicle is locked from outside.

Manual Door Opening from Outside

This door opening method is only used for emergency rescue (the airbag is deployed when a collision occurs). Under normal circumstances, this method is invalid to ensure vehicle safety.

Follow the symbol on the door, the emergency manual switch could be found in the rear wheelhouse cover on the corresponding side.

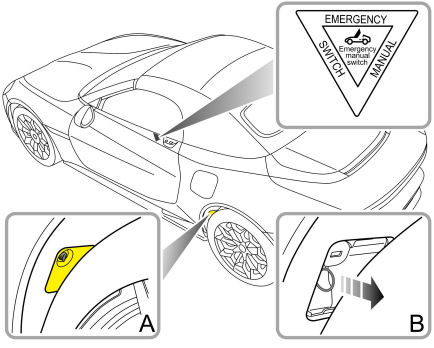

Follow the steps below to open the door:

1 Check that the window glass is already in the short down position or below.

2 Turn the cover lock catch counterclockwise and pull it outward to remove the cover (A).

3 Pull and hold the door cable and pull the door to open it (B).

Detection function*

Some models are equipped with cabin motion detection, tilt detection, and power interrupt detection functions.

Cabin Motion Detection

The cabin motion detection function is enabled by default. You can temporarily close this function on the entertainment screen, and it will be reactivated after the next power on.

When the cabin motion detection function is activated, after locking the car, the cabin detection sensor will detect moving objects inside the car.

Please fully close the windows and convertible (ensure that the cabin is a closed space and external objects cannot enter) before locking the car and leaving, and ensure that there are no people, pets, or other objects that may cause movement left in the car to avoid false alarms.

Note: When washing the car, the movement of water droplets may cause a false alarm. Please temporarily colse this function before washing the car.

Tilt Detection

The tilt detection function is enabled by default. You can temporarily close the function on the entertainment screen, and it will be reactivated after the next power on.

When the tilt detection function is activated, the tilt sensor will detect changes in the vehicle's tilt angle after locking.

Note: Do Not use a trailer to tow the vehicle or use a jack to lift the vehicle and replace tires while the vehicle is locked, in order to avoid triggering a false alarm

Power Interrupt Detection

The power interrupt detection is enabled by default.

After locking the vehicle, please do not disconnect the battery, otherwise it will trigger a power outage detection and cause the vehicle to sound an alarm; If the vehicle alarm is triggered, please reconnect the battery and use the key to lock or unlock to clear the alarm.

Tailgate

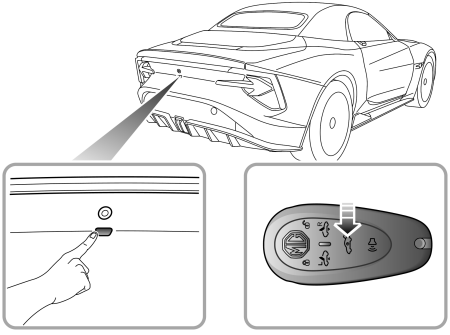

The tailgate can be opened/closed by the following means:

1 When the vehicle is unlocked or the matched key appears within 1 m range around the tailgate, directly press the open switch (as shown on the left) on the tailgate to open the tailgate.

2 Long press the tailgate open button (as shown on the right) on the key to open the tailgate.

Manual Opening of Tailgate

If the tailgate cannot be opened electrically, it can be opened manually as follows.

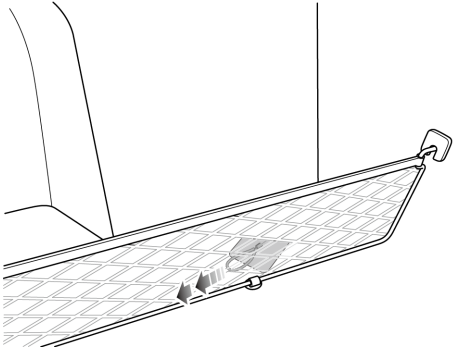

The tailgate cable is located behind the seat, in a carpet hole near the net bag.

Move the left seat forward, open the carpet hole, pull the tailgate cable, and manually unlock the tailgate.

Starting and Stopping Power System

Starting Power System

When the driver opens the driver door, enters the vehicle with a valid key, and sits in the driver seat, the instrument panel and touch screen are powered on. Information such as door opening/closing status will be displayed on the instrument panel.

1 When depressing the brake pedal, the vehicle enters the READY state;

2 Select D gear, or shift into R gear for reversing.

Note: If the steering wheel cannot be turned after the vehicle has entered "READY MODE", please exit the vehicle ensuring the drivers door is fully closed. Once out of the vehicle, please sit back in the drivers seat and place the vehicle in "READY MODE" as described in the "Starting Procedure Section"

Standby Starting Procedure

When the vehicle is in a strong radio signals interference area, or the smart key low battery occurs, please start the vehicle by the standby starting procedure according to the following steps:

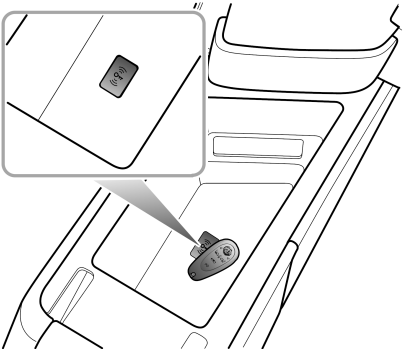

1 Place the smart key in the area as shown and ensure that the side with buttons faces up.

2 Depress the brake pedal and start the power system.

After the battery of smart key is replaced or the car leaves the interference area, if the passive start procedure can still not be used normally, seek a local Authorised Repairer.

IMPORTANT
• If three consecutive attempts to start are unsuccessful, please seek assistance. Otherwise, multiple consecutive starts may cause damage to the power system and battery. • This car is equipped with an anti-theft system. Any privately prepared key cannot start the vehicle. • In environments with temperatures below -10 degrees Celsius, the time for the power system to start will increase. Therefore, when starting, turn off all unnecessary electrical equipment.

Stopping Power System

Stop the vehicle power system as follows:

1 After bringing the car to a stop, apply the parking brake;

2 Place the shift lever in P gear;

3 After leaving the driver seat with the key and closing all doors, bonnet and tailgate, press the Lock button of the smart key to turn off the power.

Note: You can power off the vehicle even if you are in the driver seat. Please park the vehicle in a safe area and shift into P gear, then tap the icon on the entertainment display and select "Status - Power Off". If the brake pedal is depressed, the vehicle will restart.

Economical and Environmental Driving

Running-in

The brakes and tyres need time to 'bed-in' and adjust to the demands of everyday motoring. Therefore, in order to enhance the long-term operation performance, try to avoid rapid acceleration, rapid deceleration or emergency braking during the first 1,500 km.

Environment Protection

Your car has been designed with the latest technology in order to minimize hazards to the environment.

Economic Driving

The way in which you drive your car has a significant bearing on the life span of the car, as well as affecting the electricity consumption.

Drive Smoothly

Traveling at a suitable constant speed is more electricity saving than frequent braking and acceleration. Avoid making hard acceleration, sudden start-off and emergency brake. Steady acceleration or deceleration uses considerably less electricity than rapid acceleration or emergency braking, and minimizes the wear to mechanical components.

Avoid Driving at Maximum Speed

Both electricity consumption and noise levels increase significantly at high speeds.

Driving Foreseeingly

Avoid roads with traffic congestion or traffic jams. Foresee road congestion as early as possible and keep enough distance to the front car during driving, and slow down in

time. Avoid stamping on the brake pedal for a long time if there is no braking need, which will cause premature wear of friction plate.

Proper Use of Auxiliary Electrical Equipment in Car

Although it is essential to keep comfortable interior environment, the use of interior auxiliary electrical equipment will increase electricity consumption.

Driving in Special Environment

Driving in Rainy or Snowy Days

Emergency braking, accelerating and steering on slippery roads will reduce the vehicle's handling performance and grip.

- Because the visibility is poor in rainy or snowy days, please drive carefully. If the windows are fogged, please use the air-conditioning defog function.
- Because the roads are slippery in raining, please slow down and drive carefully.
- Try to avoid driving at high speed in rainy or snowy days, because a water film will be formed between tyre and road surface to affect steering and braking performance.

Driving through Puddles

Minimize driving through puddles or streams. After driving through waters, please slightly depress the brake pedal to confirm the braking performance is normal. Wet brake pads cannot brake normally. If only brake pad at one side can brake normally, steering control may be affected to cause accidents.

Moreover, the electrical system of the vehicle may be seriously damaged due to excessive moisture.

Check and Service

Check Tyre Pressures Regularly

Over or under-inflated tyres wear out more rapidly and also have a detrimental effect on the car's handling characteristics. Under-inflated tyres increase the rolling resistance of the car which, in turn, increases electricity consumption.

Do not Carry Unnecessary Loads

The additional weight of unnecessary loads wastes electricity, especially in stop/start conditions where the car is frequently required to set off from stationary. Avoid sticking mud, etc. to vehicle chassis, which not only will reduce body weight, but also can prevent body corrosion.

Maintain Correct Four-Wheel Alignment

Avoid collision with the kerb and reduce speed on uneven road surfaces. Incorrect four-wheel alignment not only will cause premature tyre wear, but also will increase power load and electricity consumption.

Charging and Discharging Requirements

Check will be conducted to confirm whether the state of inlet, jack and wire is good or not before charging.

The charging connector should be connected to the charging inlet in the body before operating the charging device.

During charging, starting operation is not allowed.

During the charging operation, people around are not allowed to contact the operator, the vehicle and the power supply device.

When the charging pile breaks down, immediately notify the relevant professional, and the operator cannot handle it without authorisation.

After charging, turn off the charging device first and unlock the vehicle, then disconnect the charging connector from the vehicle body, and close the charging port door and the charging port cap on the body.

Charging can be conducted in rainy days, but rainproof measures will be adopted for charging connector and charging port in the process of removing and inserting charging connector. Charging operation need be stopped in extreme weather such as storm.

Never use a high-power water gun directly in the charging port area for cleaning.

Charging Your Vehicle at Home

Whilst your MG has been supplied with a home charging pile, it is essential that you check with a qualified electrician that the infrastructure of your property will support the charging equipment. Please seek qualified advice that

your current electrical supply and circuits will support the requirements of the charging equipment.

Charging Pile

Various companies will supply and fit charging piles to your property, and MG insists that only qualified reputable suppliers and installers can be used for installation service. failure to have the correct equipment fitted by a qualified professional may result in overloaded circuits and fire.

Home Charging Guide

ONLY use certified approved equipment.

ONLY use qualified suppliers and installers.

When the high-voltage battery pack is fully charged, disconnect the charging plug from the vehicle socket. If it is necessary to interrupt the charging of the vehicle, isolate the power supply first, then disconnect the charging plug.

NEVER allow water or fluids to enter your charger or vehicle charging sockets.

NEVER use damaged charging piles, equipment or sockets.

STOP charging immediately if you see anything unusual, smell something burning or see sparks.

ALWAYS follow the operating instructions supplied with your charging equipment.

Note: Charging stations and power infrastructure must be installed and maintained by qualified personnel from recognized installation companies, using materials recommended by them.

Charging and Medical Condition Awareness

High voltage charging equipment can createareas of strong electromagnetic interference,this may cause operational issues withelectronic medical devices.

When using medical electrical devices such as pacemakers or cardioverter defibrillators (ICD) , please consult your doctor about whether charging or discharging your electric vehicle will have an impact on the operation of the device. In some instances, electromagnetic waves that are generated from the charger can seriously impact medical electric device operation.

Note: There are no cautions issued about medicaldevices when the car is not connected to a charge pointand charging. It is perfectly safe for individuals fittedwith pacemakers or cardioverter defibrillators to driveor ride in the vehicle.

Charging Port

The charging port is behind the charging port cover located at the rear left of the vehicle. It is incorporated into the central lock system.

Unlock the vehicle, press the charging port cover and release - the charging port will reveal.

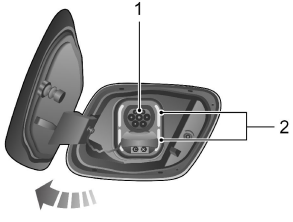

1 Slow and Rapid Charge Port - 7 Pin - Type 2 Plug

2 Rapid Charge Port - 7 Pin and 2 Pin - CCS Type Plug

After charging, refit the waterproof plug cover (where necessary), close the charging port cover, push the cover fully home until the latch locates.

ALWAYS ensure that any excess water is removed from the port area before connecting any charging device.

Charging Port Electronic Lock

In order to prevent the charging connector being disconnected inadvertently during charging, the charging socket features an electronic locking mechanism.

The electronic lock is activated as soon as the vehicle begins charging, and remains in a locked state until the charging is finished or interrupted.

Whilst the charging cable is connected, DO NOT attempt to remove the plug.

Manually Releasing the Charging Port Lock in Emergency Situations

The vehicle features an emergency release device for the charging port lock.

Open the access port on the left trunk trim panel to expose the open cable of electronic charging port lock - see picture below.

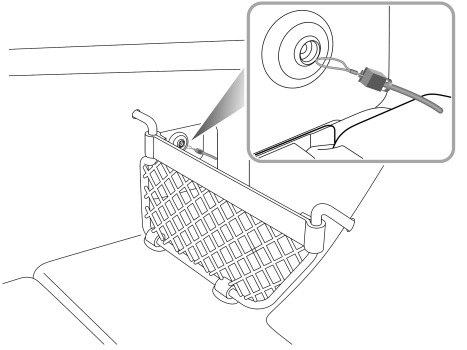

Pull the release cable to unlock the electronic lock, the charging plug can be removed.

Electric Charging Identifier Label

Identifier Label on Slow Charging Kit

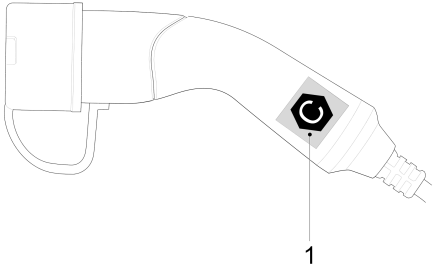

1 AC Charging Identifier Label

Identifier Labels on Charging Port

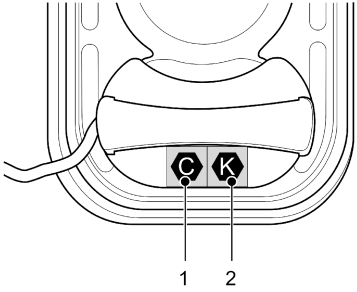

1 AC Charging Identifier Label

2 DC Charging Identifier Label

Precautions for AC or DC Charging

After opening the charging port door, check the charging identifier symbol on the cover. Check the charging plug identifier label on the AC or DC charging pile. After checking that the alphabetic characters of the charging identifier labels match, proceed the next charging step.

Note: Risk of failure, fire or injury etc. when usinga charging connector with unmatched identifiersymbols.

Electric Charging Identifier Label Symbol Table

Supply Type	Charging Port	Type of Accessory	Voltage Range	Identifier
AC	7P	Charging Port	≤480V	C
DC	7P+2P	Charging Port	50V-500V	K

Rapid Charging

Note: Please read any equipment operating instructions carefully prior to using the rapid charging station. Each type of charger may use different instructions.

Note: The cable of the charging plug should be shorter than 30 m.

If you have any doubts, please seek professional assistance.

Rapid Charging Safety Precautions

Power off the vehicle, wait for 10 seconds and then open the corresponding charging port cap.

Note: Considering the safety and service life of the high voltage battery, when using a rapid charging station to charge the vehicle the battery will not become fully charged, and therefore the instrument pack may display less than 100% power. If you have a long journey planned, it is recommended that you use a slow charging point to charge the vehicle so as not to affect your journey.

Note: If at any time during the charging process youshould want to check the state of charge, please switch the vehicle power system to the ON position. the highvoltage battery state of charge will be displayed in themessage centre in the instrument pack.

Slow Charging

Note: Carrying out a full slow charge is the only way for the high voltage battery to reach the optimal equilibrium state (equalisation charge).

High voltage battery chargers are available with various power outputs. Chargers with outputs of up to 11 kW are generally considered as slow chargers, larger than 11 kW are considered as rapid chargers and rapid chargers are available in AC or DC outputs. Generally the AC chargers are rated at 43 kW and the DC chargers at 50 kW plus.

Charging times are dependent on charger output.

Note: Chargers of up to 7kW power output are supplied via standard household single phase power. Any chargers that are rated above this, 11kW for example, will require a 3 phase power supply.

Use an AC Charging Pile

IMPORTANT
Please ensure that only charge points that meet IEC61851 and IEC 62196 are used to connect to yourvehicle.

Using an AC charging device:

1 Ensure the vehicle is power OFF and all doors are closed.

2 Open the charging port cover.

3 Insert the charging plug. Lock the vehicle.

4 On completion of the charge, shut off the power, unlock the vehicle and disconnect the plug from the vehicle.

5 Ensure the charge socket is free from debris. Close the charging port cover.

Note: If at any time during the charging process youshould want to check the state of charge, please switch the vehicle power system to the ON position. the highvoltage battery state of charge will be displayed in themessage centre in the instrument pack.

Residential Charging

To use the charging function, follow the instructions below:

1 Ensure the vehicle is power OFF and all doors are closed.

2 Open the charging port cover.

3 Connect the handle of the slow charging plug to the slow charging port on the vehicle body.

4 Connect the slow charging plug to the domestic electricity supply. Lock the vehicle.

5 On completion of the charge, shut off the power, unlock the vehicle, disconnect the plug from the vehicle, and then the domestic plug.

6 Ensure the charge socket is free from debris. Close the charging port cover.

Note: As required by IEC 62955 , the electrical leakage protective device shall adopt the high-sensitivity high-speed electric leakage protector RCD Type B or RCD Type A (DC 6mA) and shall also be reliable in quality.

Note: If at any time during the charging process youshould want to check the state of charge, please switch the vehicle power system to the ON position. the highvoltage battery state of charge will be displayed in themessage centre in the instrument pack.

Charging Information

At the beginning of the charging process, the following information will be displayed within the instrument pack message centre.

Equalisation Charging

Equalisation charging means that after a normal charging process the battery management system will enter a mode where it will attempt to equalise the charge of every battery cell, so as to ensure the overall performance of high-voltage battery pack.

At normal temperature, it takes at least 7 hours (single phase power) or 4.9 hours (three phase power) to complete a charge that includes the equalisation charge for battery pack type 1 .

At normal temperature, it takes at least 8.5 hours (single phase power) to complete a charge that includes the equalisation charge for battery pack type 2 .

Note: Ambient temperatures have an effect oncharging times. It may take longer to complete acharge when the ambient temperatures are low orhigh.

Charging Time

Charging time of high-voltage battery pack is related to many factors, such as current electric quantity, charging mode, ambient temperature and charging device power.

Fast charging time

Rapid chargers will vary in power output, on average it will take approximately 40-60 minutes to charge the high voltage battery up to 80% (80% displayed in IPK) using an average rapid charger.

Note: Ambient temperatures have an effect oncharging times. It may take longer to complete acharge when the ambient temperatures are low orhigh.

Slow charging time

At normal temperature, it takes approximately 12 hours (single phase power) to charge the high-voltage battery pack from low battery warning (high-voltage battery pack low battery warning lamp issues an alarm) to 100% for battery pack type 1 .

At normal temperature, it takes approximately 10.5 hours (single phase power) to charge the high-voltage battery

pack from low battery warning (high-voltage battery pack low battery warning lamp issues an alarm) to 100% for battery pack type 2 .

- At low temperatures, the charging time will be extended.
- If an equalisation charge has not been conducted for a long time, the required charge time will be extended.
- An equalisation charge must be carried out prior to using the car after a long period of storage or non use. In these cases the charging time will be extended.

Note: The slow charging notes above relate to usingan AC charging device. Use of the slow chargingdevice using a domestic power supply can increase thecharging times by up to 3 times.

Indicative Charging Time for Battery Pack Type 1

Rapid charging		From alarm (20%) status to 80% , it takes almost 35 minutes		
Slow charging	Residential electricity	From alarm status to 100%, it takes almost 29.5 hours	From alarm status to 100% and equalisation, it takes almost 31.5 hours	It takes approx. 32.5 hours to complete equalizing charge before the first use of a long-time parked vehicle
	AC charging pile (single phase power, about 6.6KW)	From alarm status to 100%, it takes almost 12 hours	From alarm status to 100% and equalisation, it takes almost 13.5 hours	It takes approx. 15 hours to complete equalizing charge before the first use of a long-time parked vehicle

Indicative Charging Time for Battery Pack Type 2

Rapid charging		From alarm (20%) status to 80% , it takes almost 25 minutes		
Slow charging	Residential electricity	From alarm status to 100%, it takes almost 24.5 hours	From alarm status to 100% and equalisation, it takes almost 26.5 hours	It takes approx. 27.5 hours to complete equalizing charge before the first use of a long-time parked vehicle
	AC charging pile (single phase power, about 6.6KW)	From alarm status to 100%, it takes almost 10.5 hours	From alarm status to 100% and equalisation, it takes almost 12 hours	It takes approx. 13.5 hours to complete equalizing charge before the first use of a long-time parked vehicle

Note: These times are only a guide.

Note: Alarm status refers to the high voltage battery low warning displayed in the instrument pack message centre. 100% refers to fully charged that the high voltage battery state of charge displayed in the instrument pack message centre.

Discharging

The vehicle is equipped with discharge function, this can convert the high voltage DC power in the high-voltage battery pack into domestic AC power.

This discharge function can be realized by using a discharge kit.

Note: Owners can choose to purchase discharging gun from the MG Authorised Repairer.

To use the discharge function, follow the instructions below:

1 Unlock the vehicle and access the slow charging port (the slow charging port is also the discharging port).

2 Insert the discharge gun connector into the discharge port socket.

3 Set the cut-off power of discharge in the Infotainment display screen. After setting, click the start discharging button, the electronic lock will lock the discharge gun in place and the vehicle will enter the discharge state. At this time, do not attempt to remove the discharge gun using force, which will cause damage.

4 The user is able to click the stop discharging button in the Infotainment display screen to stop the discharge, or stop the discharge after the power is discharged to the set cut-off value. At this time the electronic lock will automatically be released and the discharge gun can be removed.

5 Make sure there is no debris or foreign matter in the charging port, and then close the charging port cover

Note: After the vehicle starts discharging, if theinfotainment display goes off, the vehicle will stillmaintain the discharging condition.

Note: The current power status and available drivingrange can be displayed on the instrument cluster.

Note: During the discharge process, the user can stillset the discharge power cut-off point.

Note: During discharge, the vehicle cannot be placedin "READY" mode.

Note: Using the discharge function will reduce thedriving range of the vehicle.

IMPORTANT
• Check if the discharging gun is in good condition before discharging operation. • To discharge in rainy days, note to protect the charging port and discharging gun against rain. • If there is peculiar smell, smoking, overheating or other abnormal conditions during discharging, immediately turn off the discharging circuit and stop the discharging operation.

Electric Drive Unit

Instructions for Use

The following information is very important; please read carefully before use:

- The electric drive unit consists of a high voltage unit. Do not touch any drive components without proper training and qualification.
- Depress the brake pedal, and when the vehicle power system is ready, change the shift switch to the required position.
- Ensure that the EPB is released, and keep the brake pedal depressed until you are ready to manoeuvre the vehicle. On a flat road, once the brake pedal is released, the vehicle will automatically travel at a slow speed with the accelerator pedal not depressed.

Gear Shift

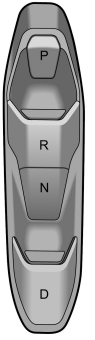

The shift switch is located on the side of the centre console screen.

Note: When shifting out of the P/N gear or into the R gear, it is necessary to apply the brake pedal.

- P : Park
  In this position, the vehicle will be locked. Please select this gear when the vehicle is stationary.

Press the P button, and the vehicle will shift into Park gear.

Note: With the brake pedal released, the driver seat belt unfastened and the driver door open, the vehicle engages P gear automatically.

- R : Reverse

  This gear is selected only when the vehicle is completely stationary and the driver has a willingness to drive backwards.

  Depress the brake pedal and pull up the R gear switch to shift into Reverse gear.

- N : Neutral

  Select this gear when the vehicle is stationary when (for example, waiting for traffic lights).

  In the P gear, depress the brake pedal and press the N gear button to shift into Neutral gear.

  In the D gear and R gear, press the N gear button to shift into Neutral gear.

- D : Drive

  It is used for normal running.

  In the P/R/N gear, depress the brake pedal and pull up the D gear switch to shift into Drive gear.

Protection Mode

When parking the vehicle, please ensure the vehicle is parked safely and that all traffic by-laws are observed.

Electric Drive Unit Power Limit

The electric drive unit may become very hot in a high-temperature environment with frequent starting, frequent rapid acceleration and deceleration, long-term continuous steep climbing, and overload of the electric drive unit, etc.

In some cases, the system will limit the power to avoid damage to the motor. The warning indicator on the instrument interface will illuminate.

In this case, park your car in a safe place or keep a low load and continue to drive your car at a constant speed to cool the motor. Only when the motor temperature is reduced and the warning indicator extinguishes can the vehicle be driven normally.

If the warning indicator does not go out after the electric drive unit has cooled down for a long time (about 20 minutes), please stop the vehicle in a safe place and contact

an MG Authorised Repairer for service as soon as possible, otherwise it may seriously damage the electric drive unit.

Electric Drive Unit Motor Failure

When the system detects a general failure with the electric drive unit motor or controller, the warning indicator on the instrument interface will illuminate in yellow. In this case, please drive carefully. For severe functional malfunction, the warning indicator will illuminate in red. In this case, please stop the vehicle in a safe manner and contact an MG Authorised Repairer for service as soon as possible.

Power System Failure

When some general failures occur in the power system, the warning indicator on the instrument interface will illuminate in yellow. In this case, please make an appointment for service. For severe functional malfunction, the warning indicator will illuminate in red. In this case, please drive carefully or stop the vehicle in a safe manner and contact an MG Authorised Repairer for service as soon as possible.

For some failures, the power system will forcibly cut off the power transmission, and the vehicle cannot be driven! In this case, please contact an MG Authorised Repairer for service as soon as possible.

Gear Shift System Failure

When some serious functional failures occur in the gear shift system, the instrument pack interface will display " EP ". At this time, for safe driving, if the vehicle speed is lower than a certain value, the power system will forcibly cut off the power transmission, and the vehicle will not be able to drive! In this case, please contact an MG Authorised Repairer for service as soon as possible.

One-Pedal Driving Function

DO NOT use the one-pedal driving function when the vehicle has a tendency of slipping.

Do not reduce the prediction of road conditions due to the convenient operation of the One-Pedal function. In an emergency, you still need to brake the brake pedal. Please always be prepared for braking to ensure driving safety.

When the one-pedal driving function is enabled, the driver can control the vehicle speed just through the accelerator pedal; depress the accelerator pedal to accelerate; release the accelerator pedal to decelerate, then the vehicle can slow down until it stops.

Note: Even if the one-pedal function can achieve the braking effect, there will still be the risk of slipping in the case of large slope. DO NOT drive riskily by virtue of the additional convenience of one-pedal driving function, please always ensure effective parking.

The driver can set the ON/OFF of the one-pedal driving control through the entertainment display.

When the vehicle is in one-pedal driving mode and the vehicle speed is low, release the accelerator pedal and turn off the one-pedal mode through the entertainment display, due to safty concerns, the system may cause the vehicle to maintain the current deceleration trend until the vehicle stops.

In some cases, the one-pedal driving function will be limited or exit, such as:

- Seat belt unfastened or door ajar;
- Brake system failure;
- Power system failure;
- When the intelligent driving function is activated, the one-pedal driving function is limited;
- The charging power is too low, such as high battery level and low ambient temperature.

Driving Mode

Switching the driving mode when the vehicle is in motion can divert driver's attention from road conditions, this operation can only be performed when safety permits.

The driving mode enables different tuning modes for power response, body stability control, steering feel, brake feel, A/C, instrument display and other functions.

The mode switch on the right of the steering wheel allows the driver to switch between the following driving modes:

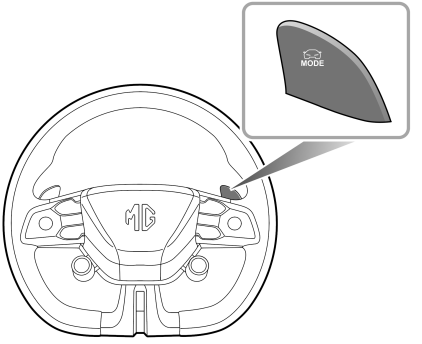

Comfortable Mode

The vehicle is in balanced tuning state for daily driving.

Sport Mode

Provide the driver with dynamic driving experience, suitable for sporty driving style.

Custom Mode

The driver can personalize certain systems or functions through the entertainment display. For mode settings, refer to the entertainment display.

The SUPER SPORT mode can be enabled with the mode switch on the steering wheel.

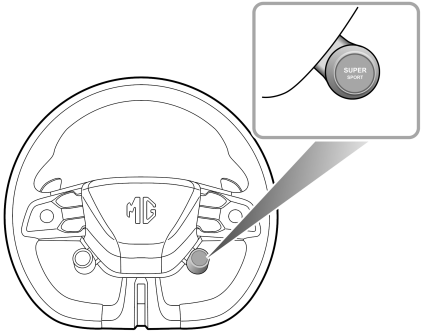

SUPER SPORT : Based on map positioning, the user can turn on this function in circuits to feel the excitement of racing on the track.

Note: Never risk driving in pursuit of a thrilling driving experience, and always ensure driving safety.

Note: In the SUPER SPORT mode, some intelligent driver assistance functions will be turned off or limited, please pay attention to the prompts on the entertainment display.

Energy Regeneration during Coasting

Deceleration caused by energy regeneration is NOT a substitute for braking safely. The driver must ALWAYS be prepared to make braking manoeuvres to maintain safe driving.

When the vehicle is in coasting state, the energy regeneration function will be activated, and the motor will convert part of the kinetic energy of the vehicle into electric energy, which is then stored in the high-voltage battery.

Energy cannot be regenerated in some situations, such as:

- The vehicle is in Neutral (it is not recommended coasting in neutral while driving);
- During torque intervention (gear shifting, tyre skidding, etc.);
- High voltage battery is fully charged;
- High-voltage battery temperature is too high or too low.

The driver can select 4 coasting energy regeneration modes by adjusting the paddle on the left of the steering wheel.

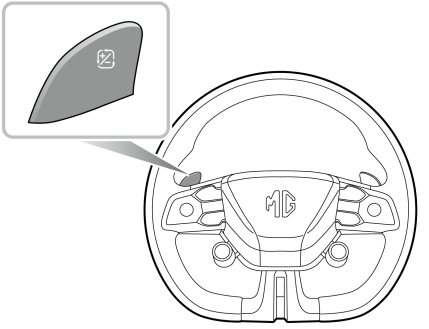

1 st Position - "Low" Mode

In this mode: less energy regenerated, longer coasting distance and no significant vehicle drag feel.

2 nd Position - "Medium" Mode

In this mode: moderate energy regenerated.

3 rd Position - "High" Mode

In this mode: more energy regenerated, shorter coasting distance and strong vehicle drag feel.

A rd Position - "Adaptive" Mode

Press and hold the paddle to enter this mode. In this mode, the vehicle Automatically adjust the intensity of energy recovery.

Brake System

Overview

The brake system can be divided into parking brake system and service brake system according to different functions.

The parking brake system refers to a brake system that can keep the stopped car stay in place, such as the so called hand brake. The service brake system refers to a brake system that can slow down the running car and even stop it, such as the so called foot brake. The service brake system is usually equipped with an auxiliary brake system. The auxiliary brake system refers to a system that will automatically apply the most appropriate pressure to the brake by detecting the braking force in case of emergency braking, which helps to reduce the braking distance, but cannot stop the vehicle in emergency.

Note: The service brake system and the parking brake system are what must be equipped in each vehicle. However, not all vehicles are equipped with an auxiliary brake system.

Parking Brake System - Electronic Parking Brake (EPB)

In the event of EPB malfunction where EPB release is not possible, please consult an MG Authorised Repairer in order to carry out an emergency manual release of the parking brake.

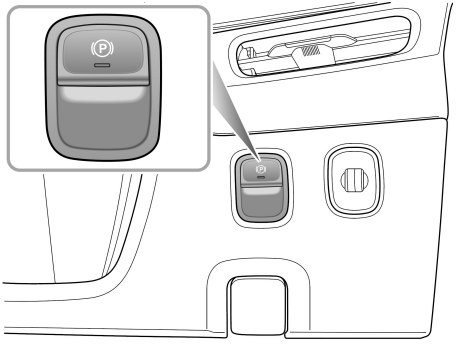

The EPB system can be turned on and off through the following ways:

- Pull up the EPB switch to turn on the EPB system after the vehicle is parked safely. Place the Start switch in READY position, depress the brake pedal, and press the EPB switch to turn off the EPB system.

If the indicator in the EPB switch and the red indicator Ⓟ in the instrument pack illuminate, it indicates that the EPB system has been turned on.

If the indicator in the EPB switch and the indicator Ⓟ in the instrument pack go off, it indicates that the EPB system has been turned off.

Note: Always turn on the EPB system every time you leave the vehicle.

Note: An audible motor noise may be heard when turning on or off the EPB system.

IMPORTANT

- DO NOT leave the vehicle before the gear indicator is displayed as P , the vehicle may not be safely parked due to EPB failure and slip.
- In the event of a flat battery or power failure, it is not possible to apply or release the EPB. In such a case, 'booster cables' shall be used for emergency vehicle start. Please refer to 'Emergency Starting' in 'Emergency Information' chapter.

Starting Aid

If the driver's seat belt is fastened, and the accelerator pedal is pressed for start off, the EPB system will be automatically turned off.

Emergency Braking Function

Inappropriate use of EPB can lead to accidents and injuries. DO NOT apply the EPB for vehicle braking whilst moving, unless in an emergency.

During emergency braking using the EPB, DO NOT switch off the power system, this could result in serious injury.

In the event of normal brake failure during driving, emergency braking can be initiated by pulling and holding the EPB switch upward. An audible warning will sound during emergency braking. The braking process will be cancelled by releasing the EPB switch.

Service Brake System

This series of models is equipped with an Integrated Braking System (IBS), which brakes the vehicle through dual circuits. Pay attention to the followings during use of the IBS :

- The IBS only functions with the power system in READY mode. NEVER allow the vehicle to freewheel with the power system turned off.
- If the power system is turned off while driving, you should firmly press the brake pedal, and stop the vehicle as quickly as traffic safely permits.
- If the IBS performance degrades due to a low battery or other reasons, you need to apply more force than usual to the brake pedal to brake effectively.
- When driving through puddles or heavy rain, a water film may form on the surface of brake disc, which easily reduces the braking efficiency and extends braking distance. In this case, keep a safe distance from other vehicles and intermittently apply the brake pedal to keep the brake disc surface dry.

- If the braking efficiency decreases due to vehicle failure, please contact a local Authorised Repairer for service as soon as possible.

Brake Energy Regeneration

IBS supports brake energy regeneration. When the brake pedal is pressed for braking, the IBS will determine the driver's demand for braking force. The drive motor will convert the vehicle's kinetic energy into electrical energy, which is stored in the high voltage battery when the vehicle is decelerating. This process can improve the range of the vehicle.

Body Stability Control System

The body stability control system includes Dynamic Stability Control System (SCS) and Traction Control System (TCS).

SCS is designed to assist the driver in control of driving direction. When SCS detects that the vehicle is not moving in the intended direction, it will intervene by applying brake force to selected wheels or through the power system to prevent sliding and stabilise the driving direction by correcting the under-steering or over-steering.

TCS contributes to maintaining the control to the vehicle by improving the vehicle's traction trafficability and driving stability. TCS monitors the driving speed of each wheel individually. If spin is detected on one wheel, the system will automatically brake that wheel, transferring torque to the opposite, non-spinning wheel. If both wheels are spinning, the power system output torque will be reduced until traction is regained.

SCS and TCS are automatically switched on when the vehicle is powered on. And they can be switched off by using the switch located on the Infotainment display.

Note: Disabling SCS and TCS will not affect the operation of ABS . Always disable SCS and TCS when driving with snow chains fitted.

Anti-lock Brake System (ABS)

When travelling at high speed or there is a danger of aquaplaning, i.e. where a layerof water prevents adequate contact between the tyres and the road surface, ABS cannot overcome the physical limitations of stopping the car in a short distance. In these cases, it is the responsibility of the driver to maintain a safe distance from other vehicles.

DO NOT pump the brake pedal at any time, this will interrupt the operation of ABS and may increase the braking distance.

The ABS is mainly used to automatically adjust the braking force of each brake when braking to prevent the wheels from being locked, thus avoiding dangerous situations such as loss of direction or side slip during emergency braking.

This system enables the driver to maintain control over the steering in case of emergency braking, keeps the vehicle stable, and improves the safety factor.

Under normal braking conditions, ABS will not be activated. However, if the braking force exceeds the adhesion between the tyres and the road surface, causing the wheels to lock, the ABS will automatically come into operation.

If emergency braking is required, the driver should apply full braking effort to trigger the ABS even when the road surface is slippery.

Note: On soft surfaces such as powdery snow, sand or gravel, vehicles equipped with ABS may have a braking distance greater than those without ABS. This is because the natural action of locked wheels on soft surfaces is to build up a wedge of material in front of (or to the side of, if steering) the tyre contact patch. This effect assists the car to stop when braking or to change direction when steering.

IMPORTANT
• Although ABS can greatly improve the driving safety, whether it can truly be safe still depends on the driver's own standardized driving behavior. • The operation of the normal braking system is not affected by partial or full loss of the anti-lock brake system (ABS).

Auto Hold

The auto hold function cannot guarantee the stability of the vehicle when starting off or braking on hills especially on slippery or icy surfaces.

When auto hold stops the vehicle for reasons such as power system shutdown, releasing the seat belt or pressing the auto hold switch, the electronic parking brake is applied. It cannot be guaranteed that the vehicle will be stabilised in all cases. For example, the rear wheels are on a snowy or slippery road surface, or the vehicle incline is too great. Please make sure that the vehicle is safely stabilised prior to exiting.

DO NOT leave the vehicle when the engine is operating and the auto hold is active.

Auto hold cannot guarantee the electronic parking brake operation in all cases where the power system is turned off. Please ensure the electronic parking brake is applied and the vehicle is stablised prior to exiting the vehicle.

The auto hold function should be switched off during the use of automatic car washes, the electronic parking brake may suddenly apply and cause vehicle damage.

If the vehicle is required to stop frequently for long periods while driving (such as wait at the traffic lights, stop on a slope or in urban stop-and-go conditions), the Auto Hold function can assist you in stabilising the vehicle, enabling you to remove your foot from the brake pedal when the vehicle is stationary and the Auto Hold is active.

Auto Hold has 3 states as follows:

1 Standby:

With the driver's seat belt fastened, the driver's door closed and the vehicle in READY state, touch the Auto Hold switch on the entertainment display to switch the Auto Hold function from Off to Standby state, and

the indicator Ⓐ in the instrument pack remains on in white.

2 Parking:

When the vehicle is moving forward, depress the brake pedal to stop the vehicle, then firmly depress the brake pedal to switch the Auto Hold function from Standby to Parking state. The indicator Ⓐ in the instrument pack remains on in green.

Note: If the vehicle is stopped by firmly pressing the brake pedal, the Auto Hold function will directly enter the parking state.

The Auto Hold will exit the parking state if the brake pedal is firmly pressed again.

The Auto Hold will exit the parking state based on the slope if gear D is selected and the accelerator pedal is pressed.

The Auto Hold will exit the parking state if gear R is selected.

3 Close:

Touch Auto Hold switch again to disable the function.

The Auto Hold will exit the parking state if the EPB switch is pressed with the brake pedal pressed.

The Auto Hold will exit the parking state under some circumstances such as releasing the seat belt, turning off the power system, remaining static for a length of time or touching the Auto Hold switch. At this time, the EPB will be applied.

Note: The EPB will NOT be applied when touching the switch to turn the Auto Hold off with the brake pedal pressed.

Note: When the vehicle is in R gear, the Auto Hold function will not be triggered.

Hill Hold Control (HHC)

HHC has limitations when subject to adverse conditions such as wet or icy surfaces, and the driver must always pay attention to the vehicle conditions.

DO NOT exit the vehicle with only HHC applied, it may lead to a serious accident when HHC releases.

During hill start under a stop-and-go road condition, please step on the brake pedal deeply for several seconds before each start.

HHC assists the driver by 'holding' the vehicle during hill starts. If the driver releases the brake pedal, the HHC will hold the vehicle stationary for a short time.

HHC system will be activated when the following conditions are met at the same time:

- Close the driver side door.
- The vehicle is stopped steadily on a slope.
- SCS is fault free.
- EPB is fault free and released.
- The vehicle is in READY state.
- D or R gear is selected.
- Sufficient force has been applied on the brake pedal before start.

Note: The HHC can also work when the vehicle is reversing uphill.

Emergency Braking Hazard Warning Strobe Function (HAZ)

If the driver makes an emergency braking manoeuvre and certain conditions are met while driving, the brake lamp will automatically strobe to alert the drivers behind, thereby reducing the occurrence of rear-end collisions.

Note: If the hazard warning lamps are being operated manually, this suspends the HAZ function.

After the HAZ function is activated, when the emergency braking manoeuvre is exited, the brake lamp will stop strobing after several seconds.

Note: If the vehicle speed is less than 10 km/h when the brake lamp strobe stops, the hazard warning lamp will illuminate automatically. Short press the hazard warning lamp switch or speed up to above 20 km/h for 5 s to turn off the hazard warning lamp.

Auxiliary Brake System

The auxiliary brake system consists of Electronic Brake Force Distribution System (EBD) and Electronic Brake Assistance System (EBA).

EBD automatically distribute the braking force between the front and rear wheels, so that the vehicle can have good braking performance under different load conditions.

The EBA increases the braking force applied on each wheel during emergency braking to assist the driver in quickly triggering ABS , thereby shortening the braking distance.

Adaptive Cruise Control (ACC)

Adaptive cruise control is a driver assistance function for comfort, which can provide assistance for the driver but cannot replace the driver in driving. When using the adaptive cruise control system, it is important that the driver maintains concentration at ALL times and is prepared to take action. Otherwise, accidents or personal injuries may occur.

Depending on whether there is a vehicle ahead, the adaptive cruise control can conduct automatic switching between constant speed cruise and car-following cruise. With the adaptive cruise control, the vehicle is allowed to conduct constant speed cruise within a certain speed range, or conduct car-following cruise by setting the distance between the vehicle and vehicles ahead. If a vehicle is detected in your path of travel, the ACC may apply moderate braking or acceleration to maintain the selected following distance.

Note: The adaptive cruise control system is designed for highways and roads in good condition. It is recommended not to be used on urban roads and mountain roads.

Adaptive Cruise Activation

After following the vehicle ahead to a stop, the driver must ensure that there are no obstacles or other traffic participants, such as pedestrians,directly in front of the vehicle before starting off to follow the vehicle ahead again.

Whilst using the car following cruise function, it is strongly recommended that the driver does not touch the accelerator pedal. Any activation of the accelerator will not allow the adaptive cruise control system to automatically apply the brakes, and the vehicle is only controlled by the driver's manipulation of the accelerator pedal.

DO NOT exit the vehicle when the adaptive cruise control system keeps the car stationary. Before leaving the vehicle, always shift into P gear and ensure that the vehicle has been powered off.

If the adaptive cruise control system keeps the car stationary, the driver still needs to pay full attention and be ready to apply the brakes manually. Please note that the vehicle will no longer remain stationary and may move forward or slip on slope if the function is deactivated, turned off or canceled at this time.

When driving on a bend, the adaptive cruise control may actively reduce the vehicle speed to maintain vehicle stability and safety.

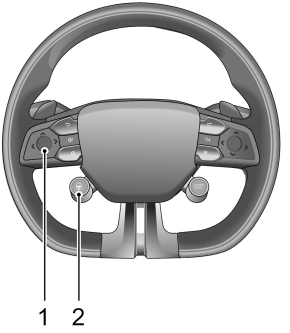

1 Knob

2 Pilot Button

ACC can be set by the combination of the intelligent driving switch on the entertainment display and the knob on the left of steering wheel.

When ACC is selected for intelligent driving on the entertainment display and the Pilot switch (2) is pressed, the ACC indicator on the instrument pack turns blue

and ACC is activated, with the target speed being the actual speed of the vehicle at the time of activation (if the speed is less than 30 km/h, the target speed will be set at 30 km/h). If the speed of the vehicle ahead is greater than the cruise target speed of your vehicle, your vehicle will maintain the target speed to conduct constant speed cruise; if the speed of the vehicle ahead is lower than the cruise target speed of your vehicle, it will enter the car-following cruise. In the car-following cruise, you can follow the vehicle ahead to a stop. If the stop time is less than a certain time, the vehicle may automatically start off to follow the vehicle ahead; if the stop time is more than a certain time,the vehicle will display a reminder message, and the driver needs to depress the accelerator pedal to reactivate the adaptive cruise control.

Note: Manual deactivation of either the Stability Control System (SCS) or Traction Control System (TCS) will inhibit the operation of the adaptive cruise control system

Adaptive Cruise Target Following Distance Adjustment

When the adaptive cruise control system is activated, move the knob to left (1 , to decrease the distance) or right (to increase the distance) to adjust the distance to the vehicle ahead, switch among 3 distance settings, and display it on the instrument pack.

Select appropriate following distance according to the relative speed with the vehicle ahead, traffic and weather conditions, driving conditions and driving habits. The higher the speed, the longer the following distance.

Adaptive Cruise Target Speed Adjustment

When the adaptive cruise control system is active:

- Use the accelerator pedal to reach the desire speed, move the knob (1) on the left of steering wheel down, and release the accelerator pedal. The vehicle will cruise at the desired speed.
- When moving the knob on the left of steering wheel up (1 , to increase the cruise speed) and down (to decrease the cruise speed),the target cruising speed will change intermittently. When pressing and holding it, the target cruising speed will continue to change until the knob is released.

Note: If the vehicle ahead makes harsh acceleration or deceleration, the adaptive cruise control may be unable to maintain the following distance accurately; in this case, the driver shall make appropriate operations such as depressing the brake pedal or changing the lane according to the surrounding traffic and road conditions.

Adaptive Cruise Pause

When the adaptive cruise control system is activated, short press the Pilot switch (2) to cancel the function, and the system will exit to the Standby state.

Automatic Deactivation of Adaptive Cruise

In the following situations, the ACC may be automatically deactivated, which requires the driver to manipulate the vehicle on his/her own:

- The ACC option exits in the intelligent driving on the entertainment display.
- Depress the brake pedal when the vehicle is not stationary.
- Move the shift lever to any gear other than Drive gear.
- The driver seat belt is unfastened.
- The accelerator pedal is pressed for a long time.
- Any door is opened.
- Pull up the EPB switch.
- Follow the vehicle ahead to a stop and the stop time exceeds a certain time.
- Camera obscured or unclear (smudged, frosted), camera unable to focus, camera unable to calibrate, and camera failure due to weather damage to the camera's field of view such as low sun altitude, glare, roadway water spray, icy windscreen, rain, snow, fog, etc., or system malfunction.

If following the vehicle ahead to a stop with the adaptive cruise control system enabled, if any of the following conditions occur whilst the vehicle is in a stopped state, the EPB will automatically be applied:

- The driver unfastens his/her seat belt
- The driver door is open.
- The stop time exceeds a long time

Adaptive Cruise Override

If the driver presses the accelerator pedal with the adaptive cruise control system activated, the vehicle will keep the

'Cruise' state and speed up. When the accelerator pedal is released, the ACC will resume to the preset target cruise speed.

When the accelerator pedal is pressed for a long time, the adaptive cruise control system may exit to 'Standby' state.

Adaptive Cruise Resume

If the adaptive cruise control remains on after the pause, reactivate it by moving the knob on the left of steering wheel upward. In this case, the target cruise speed is the target speed before exiting the adaptive cruise control system.

Clearing Target Speed Memory

Switching the intelligent driving on the entertainment display to other modes will turn off the adaptive cruise control system, synchronously clearing the system's set speed in the memory. Turning off the Start switch will also clear the set speed stored.

The adaptive cruise control system is limited or does not work even if it is enabled, including but not limited to the following conditions:

- Encounters a wheel or object which is stationary or traverses the lanes;
- Approach the vehicle ahead so fast that the system cannot apply sufficient brakes;
- There is oncoming traffic or the vehicle ahead applies emergency braking;
- The vehicle ahead reverses;
- The vehicle ahead suddenly cuts out;
- Encounters a vehicle driving at a low speed;
- Encounters a vehicle with loaded items protruding from the body contour;
- Encounters a vehicle with a higher chassis (e.g., a truck);
- Encounters pedestrians, non-motor vehicles or animals;
- The vehicle is driving on an uneven road or a complex traffic road section;
- The vehicle makes a sharp turn;

- The vehicle is driving in scenarios with insufficient light, glare or backlight, such as: in the evening, at night, in the building or underground parking, driving into, out of or in tunnels;
- The vehicle is driving under the mottled tree shadow or the shadow of viaduct railings;
- Overload at the cargo area causes the vehicle head tilting upward.

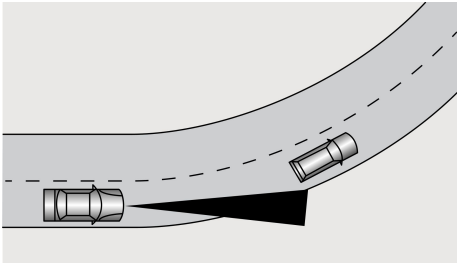

Special Driving Environments

In the following circumstances, if the ACC is in use, the driver shall pay special attention to selecting suitable speed and prepare for taking measures at all times.

1 When turning at an intersection or following a vehicle into or out of a curve, the ACC may be unable to detect the vehicle ahead on the same lane, or may respond to a vehicle on another lane.

Note: DO NOT use the adaptive cruise control system on entrance/exit ramps or sharp curves.

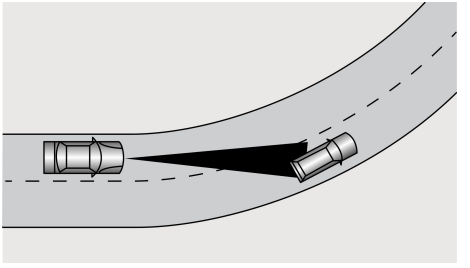

2 If the vehicle ahead changes lane, but not driving into the target lane completely, the ACC may be unable to detect the vehicle.

If the vehicle ahead changes lane, but does not exit the current lane completely, the ACC may determine that the vehicle ahead has already left and accelerates.

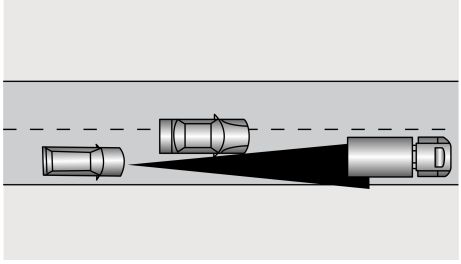

3 DO NOT use the adaptive cruise control system when driving on the steep hill, because it cannot detect the vehicles on the same lane.

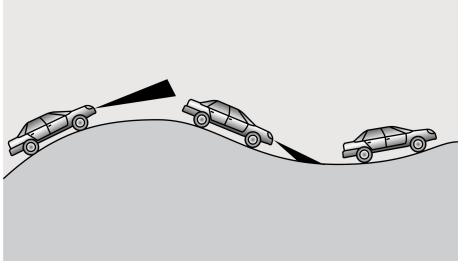

4 When driving at a small body width overlap ratio (A) with the vehicle ahead, the ACC system may be unable to detect the vehicle.

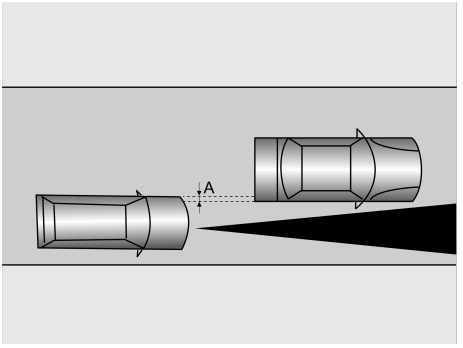

Note: Please DO NOT use the adaptive cruise control system in the following situations:

- ***Driving in bad weather conditions;***
- ***When the ambient light is insufficient, the light is too bright, or the forward lighting of the vehicle is poor;***
- ***Driving on rough or poor road surfaces;***
- ***Driving through roadworks or construction sites;***
- ***Driving on low friction roads (the rapid change of the tyre traction may result in the excessive wheel slip).***

Driver Assistance System

The driver assistance system can detect the road and environmental information ahead of the vehicle with the front view camera fitted in the interior rearview mirror base cover, and provide the warning messages or intervene the vehicle when certain conditions are met to help the driver control the vehicle more safely and reliably.

Note: DO NOT operate any infotainment switches whilst driving. If you wish to make any settings changes, please pull over when it is safe and legal to do so.

Front View Camera Description

Front View Camera Calibration

Recalibrate the front view camera in the following situations:

- Remove/refit the front view camera;
- Remove/refit the windscreen.

Note: The calibration of front view camera requires professional knowledge and tools. If calibration is required, please seek a local Authorised Repairer.

View Obstruction of Front View Camera

When the front view camera does not function properly due to view obstruction by stain and foreign objects on the windscreen, the relevant prompt message will pop up on the instrument pack, please actively wipe or clean the windscreen at that time.

In the following situations, the detection performance of front view camera will be affected:

- Driving in bad weather, such as heavy fog, heavy rain, heavy snow, dust, sand storm, etc. which cause visibility reduction;
- Affected by the light, such as: in the night and under poor auxiliary lighting, backlighting in the view, direct light from the oncoming vehicles, quick bright/dark jump (tunnel entrance/exit), driving on the strong reflective road surface (road surface with water or snows in rainy or snowy days), in the tunnels, buildings, etc.
- The car drives on the places with insufficient light, such as: in the evening, at night, in the tunnel, building, underground parking, etc.;
- The front view camera is partially or fully blocked by the obstacles, such as foreign objects, oil stains, dust, mud, snow, rain, frost or splashed water on the windscreen;
- The windscreen in view of the front view camera is broken;
- Not calibrated after removing/refitting the front view camera or the windscreen;
- The front view camera is not secured in place.

Intelligent Overspeed Alert

The intelligent speed assist system is an auxiliary function. It may display an incorrect speed limit value or no speed limit value in the instrument pack due to various factors. As a result, the vehicle speed is not restricted within the correct range. The driver still needs to observe the speed limit of the road traffic, and speeding is strictly prohibited.

The front view camera cannot recognise speed limit signs painted on the road surface. The driver MUST observe these speed limits and adjust the their speed accordingly.

The setting interface of the intelligent overspeed alert is located on the entertainment display, and the driver can turn on or off the system through the entertainment display. The vehicle detects the speed limit sign (e.g. 60) on the roadside through the front view camera. When the vehicle speed is greater than the speed limit value in the speed limit sign speed indicator, the speed indicator blinks and prompts the driver to control the vehicle speed.

When the intelligent overspeed alert is activated, the speed limit sign speed indicator illuminates. When the vehicle passes the first recognized speed limit sign, the speed limit sign speed indicator shows the real-time speed limit value. If the vehicle encounters a speed limit sign with the same speed limit value, the speed limit value in the speed limit sign speed indicator is not updated.

Note: After the car identifies a speed limit sign, if no new signs (same or different) are identified beyond a certain mileage, the original speed limit value on the instrument pack will be reset and displayed as "–" . The driver MUST observe these speed limits and adjust the their speed accordingly.

Note: When the vehicle needs to change lane, make a turn or turn around at an intersection and the driver uses an indicator in advance and slows down, the original speed limit value on the instrument pack will be reset until a new speed limit sign is detected. If the conditions are not met, the original speed limit value will be maintained an not be reset. The driver MUST observe the speed limits and adjust their speed accordingly.

The intelligent overspeed alert may not work properly in the following cases:

1 The detection performance of front view camera is affected;

2 The vehicle is driven at a high speed;

3 The speed limit signs are blocked by the trees at the roadside, ice/frost, snows, dusts, etc; or the speed limit signs are placed improperly or damaged;

4 There are several speed limit signs set up over the road or at the roadside; Currently, the front view camera can only identify the speed limit signs for the lane the car drives on;

5 The speed limit signs set up at the forks in the road, the curves and the on-ramp/off-ramp;

6 Lane change, etc.

IMPORTANT

- The camera may not correctly recognise speed limit signs during poor lighting conditions, bad weather, non-standardized or sheltered speed limit signs or the camera's own restrictions which include the recognition of similar signs (e.g., recognise a weight limit sign as a speed limit sign, or recognise a minimum speed sign as the maximum speed sign).
- The camera cannot identify the text provided below the speed limit sign, such as Auxiliary Lane, 100 m Ahead, School Section, 7:00-10:00 , etc. The camera will identify the speed limit sign with text as a normal speed limit sign.
- Some drastic and rapid steering operations of the driver may be judged as changing lane or turning around in the intersection by the system, resulting in the identified speed limit signs being cleared.
- In cases where a speed limit sign contains multiple speed limits. The camera may not identify all the speed limits.

Speed Limit Assist System

The speed limit assistance system is only an auxiliary function. In cases where the speed limit sign is not standardized or the front view camera is blocked, the wrong speed limit value or no speed limit value may be displayed on the instrument pack, and the vehicle is not restricted in the correct speed range, so the driver still needs to be responsible for real-time evaluation of the speed limit on the road.

The front view camera cannot recognise speed limit signs painted on the road surface. The driver MUST observe these speed limits and adjust the their speed accordingly.

The setting interface of the speed limit assist system is located on the entertainment display, and the driver can select the mode through the speed limit mode setting interface: Intelligent or Manual.

1 Intelligent: i.e. Intelligent Speed Limit; The vehicle detects roadside speed limit signs (e.g. 60) through the front view camera, and actively intervenes in the speed control to keep the vehicle speed within the permitted maximum speed limit.

2 Manual: i.e. Manual Speed Limit; The driver sets the maximum speed via the button on the left side of the steering wheel, and actively intervenes in the speed control to keep the vehicle speed within the permitted maximum speed limit. Refer to "Manual Speed Limit Vehicle Speed Setting".

Note: If mode selection is disabled, please confirm that the intelligent driving is turned off on the infotainment display and try agian.

Manual Speed Limit Vehicle Speed Setting

After the manual speed limit is enabled, the target speed limit can be set via the button on the left side of the steering wheel, as follows:

1 When the manual speed limit is turned on, the manual speed limit function enters the standby state, and the speed limit assist system indicator on the instrument pack illuminates in white; press the Pilot switch (2 below) to activate the manual speed limit function, and the speed limit assist system indicator illuminates in

blue. When the Pilot switch is pressed for the first time, if the actual speed is lower than 20 km/h, the target speed limit displayed on the speed limit assist system indicator will be 20 km/h. If the actual speed is higher than 20 km/h, the current speed will be rounded up to the nearest multiple of 5 as the target speed limit value. The target speed limit value for the manual speed limit can then be adjusted through the speed adjustment button (1 below). The target speed limit value is increased or decreased by 5 km/h every time the button is pressed upwards or downwards. The speed limit value will change continuously by 5 km/h when the button is pressed upwards/downwards and held.

2 When the manual speed limit is activated, the system will actively limit the vehicle from exceeding the target speed limit. When the actual vehicle speed exceeds the target speed limit set by the driver, the system will gradually reduce the vehicle speed to below the target speed limit.

3 When the manual speed limit is activated, the driver can press the Pilot switch (2 below) to return the system to standby. Press the Pilot switch (2 below) again to restore the manual speed limit.

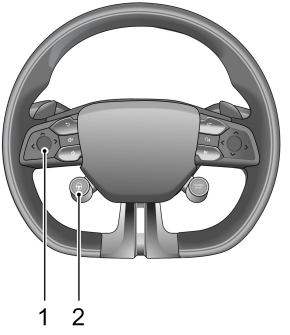

When the intelligent speed limit is turned on, the intelligent speed limit function enters the activation state, and the speed limit assist system indicator on the instrument pack illuminates in blue. When the vehicle passes the first recognized speed limit sign, the speed limit sign speed indicator shows the real-time speed limit value. If the vehicle encounters a speed limit sign with the same speed

limit value, the speed limit value in the speed limit sign speed indicator is not updated.

Note: After the car identifies a speed limit sign, if no new signs (same or different) are identified beyond a certain mileage, the original speed limit value on the instrument pack will be reset and displayed as "–" . The driver MUST observe these speed limits and adjust the their speed accordingly.

Note: When the vehicle needs to change lane, make a turn or turn around at an intersection and the driver uses an indicator in advance and slows down, the original speed limit value on the instrument pack will be reset until a new speed limit sign is detected. If the conditions are not met, the original speed limit value will be maintained an not be reset. The driver MUST observe the speed limits and adjust their speed accordingly.

The driver can temporarily exit the speed limit assist system by doing the following:

1 Temporarily exceed the speed limit by depressing the accelerator pedal deeply;

2 Short press the Pilot switch (2 above) to temporarily exit the speed limit assist system function, at which time the speed limit assist system indicator on the instrument pack turns white, and short press the Pilot switch again to resume the speed limit assist system function.

The intelligent speed limit may not work properly in the following cases:

1 The detection performance of front view camera is affected;

2 The vehicle is driven at a high speed;

3 The speed limit signs are blocked by the trees at the roadside, ice/frost, snows, dusts, etc; or the speed limit signs are placed improperly or damaged;

4 There are several speed limit signs set up over the road or at the roadside; Currently, the front view camera can only identify the speed limit signs for the lane the car drives on;

5 The speed limit signs set up at the forks in the road, the curves and the on-ramp/off-ramp;

6 Lane change, etc.

IMPORTANT

- The camera may not correctly recognise speed limit signs during poor lighting conditions, bad weather, non-standardized or sheltered speed limit signs or the camera's own restrictions which include the recognition of similar signs (e.g., recognise a weight limit sign as a speed limit sign, or recognise a minimum speed sign as the maximum speed sign).
- The camera cannot identify the text provided below the speed limit sign, such as Auxiliary Lane, 100 m Ahead, School Section, 7:00-10:00 , etc. The camera will identify the speed limit sign with text as a normal speed limit sign.
- Some drastic and rapid steering operations of the driver may be judged as changing lane or turning around in the intersection by the system, resulting in the identified speed limit signs being cleared.
- In cases where a speed limit sign contains multiple speed limits. The camera may not identify all the speed limits.

Intelligent Cruise Assist System (ICA)

Intelligent cruise assist system is an auxiliary function that assists the driver, but does not replace the driver in driving. Due to the limitations of system detection and control when using the intelligent cruise assist system, the driver must always hold the steering wheel, be aware of the surroundings, and correct or take over the steering wheel control when necessary; otherwise accidents or personal injuries may be caused.

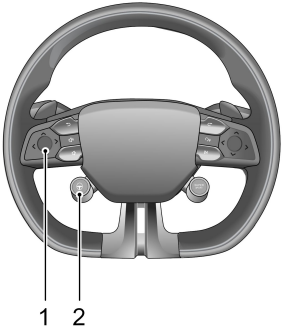

- Knob (1);
- Pilot Switch (2);

The system switch is located on the entertainment display, and the system can be turned on/off in the appropriate Driver Assistance interface.

When the following conditions are met:

- Intelligent cruise assist system (ICA) is selected for intelligent driving on the entertainment display;

- The system detects the lane lines on both sides of the vehicle;
- The vehicle is in Drive gear.

A short press on the Pilot switch activates the intelligent cruise assist system. The intelligent cruise assist system works on the basis of adaptive cruise control system. If the lane lines ahead on both sides are clear, the system will assist the vehicle in driving within the lane lines; at low speeds, if there are other vehicles ahead and the lane lines are not clear, the system can assist the vehicle in following the track of the vehicle ahead.

Note: When ACC is active and the above conditions are met, the intelligent cruise assist system can be activated without pressing the Pilot switch.

When the system detects that the driver has not controlled the steering wheel in a certain period of time, it will give warnings to prompt the driver.

Note: The driver shall adjust the vehicle speed and the following distance according to the road visibility, weather and road conditions. The intelligent cruise assist (ICA) system does not respond to pedestrians, animals, stationary vehicles and vehicles that drive across the lane or oncoming vehicles on the same lane. If the intelligent cruise assist system cannot reduce the vehicle speed sufficiently, the driver shall apply the brake by depressing the brake pedal. If another vehicle cuts into the current lane under congested conditions, the system may not brake timely due to the fact that the cut-in vehicle does not enter its detection range, and the driver shall actively apply the brake.

The intelligent cruise assist system will be limited or does not work in the following conditions:

- The driver turns on the turn signal lamp, depresses the accelerator pedal rapidly, makes emergency steering or depresses the brake pedal hard;
- The vehicle is in Reverse gear;
- The system recognizes that the driver does not manipulate the steering wheel for a period of time, or the driver operates the steering wheel when the system implements control;

- The lane line is too thin, damaged or fuzzy; old and new markings overlap; road sections without lane lines, such as non-standardized roads and construction areas; special lane lines, such as deceleration cue lines, guide lines, etc.;
- Rain, snow, fog and other low visibility weather; low light intensity at night, direct sunlight, or backlit environment; dusty/crosswind conditions; roadways where objects cast large shadows on the lane;
- Congested traffic; poor road conditions such as bumpy, slippery, cracked or icy road surfaces;
- The vehicle is driving on the curve with a small curvature radius or on too narrow or too wide road; uphill and downhill roadway scenarios; special roads, such as tunnels; the presence of edges or other high-contrast lines on the road surface other than lane lines, such as pavement seams, kerbs, etc.;
- Insufficient length of on- and off-ramp approaches; complex terrain at roadway forks; special lane changes such as lane merges, reroutes, and diversions;
- The vehicle has just entered the road section with lanes or has passed the road section without lane lines;
- Fast cut-in vehicles in close proximity; fast cut-out vehicles; rapidly approaching side and rear vehicles; vehicles partially encroaching on the lane targeted for lane change;
- The vehicle makes rapid lane change or lateral sway; during a lane change, a vehicle in the adjacent lane and this vehicle change lanes to the centre at the same time, or a vehicle from behind accelerate suddenly to overtake a vehicle;
- Guardrails, crash piers, etc. at off-ramps or bifurcations;
- Stationary or slow-moving vehicles and lateral vehicles ahead; static obstacles, such as encountering with road construction facilities in the road (traffic cones, traffic barrels, traffic bollards, warning triangles, or other roadblocks);
- Animals, walls and other unidentified obstacles;
- Special vehicles, such as damaged vehicles, irregularly shaped vehicles;
- Crossing pedestrians, vehicles, bicycles, motorcycles, tricycles, and oncoming traffic in the opposite direction;
- Obscured windscreen (by water spray, dust or sticker, etc.); camera unable to focus, camera unable to calibrate, and camera failure due to weather damage

to the camera's field of view such as low sun altitude, glare, roadway water spray, icy windscreen, rain, snow, fog, etc., or system malfunction;

- The anti-lock brake system (ABS) and the dynamic stability control system (SCS) are activated;
- The anti-lock brake system (ABS), dynamic stability control system (SCS), electric power steering system (EPS), etc. fail.

It is recommended to turn off the intelligent cruise assist system in the following situations:

- Drive in sports style;
- Drive in bad weather;
- Drive on poor road section;
- Drive through road construction site;
- When driving the vehicle on a steep, meandering road or slippery road (such as snow and ice road, wet road, road with puddle);
- When driving off-road or on an unpaved road.

IMPORTANT

- In cases where the number of lanes increase or lanes merge the driver MUST take full control of the vehicle.
- In areas where there are complex traffic conditions such as intersections or road junctions with congestion, the driver MUST take full control.
- The driver MUST be aware of the surroundings and be able to assume full control of the vehicle when using the traffic jam assist system to track the car in front should the need arise.

Forward Collision Assist System

The driver remains responsible for the safety of the entire driving process, even if the vehicle is equipped with a forward collision system. The driver MUST pay full attention and drive carefully. As with all the driver assist systems, the forward collision system cannot prevent accidents or avoid collisions in all situations. The driver MUST always remain in control to avoid accidents or emergency situations.

Emergency braking whilst under the control of forward collision system may cause injuries to the passengers. Therefore, drive carefully and all passengers MUST wear seat belts at all times.

Ensure forward collision system or ignition/vehicle power system is switched off when being towed. If forward collision system is enabled when the vehicle is being towed, adverse effects may affect the safety of your vehicle, the towing vehicle and the people around.

To avoid the occurrence of accidents, never specially test the functions of forward collision system.

The forward collision assist system switch is located on the entertainment display. The system can be turned on/off in the appropriate Driver Assistance interface, and the mode and sensitivity can be selected.

Alarm

When the system detects a risk of collision between this vehicle and the vehicle ahead in this lane or pedestrians, it will give warnings to prompt the driver to slow down and keep a relatively safe distance from the vehicle ahead or pedestrians and a relatively safe speed.

Alarm + Braking

When the system detects a risk of collision between this vehicle and the vehicle ahead in this lane or moving pedestrians, the brake system will lower the speed automatically so as to avoid collision or mitigate the damage of the collision. If the vehicle is braked to stop, it will keep stationary within a short time, then the control of the vehicle will be handed over to the driver.

The system will automatically slow down the vehicle only when the following conditions are met:

- The dynamic stability control system (SCS) and traction control system (TCS) are ON and failure-free;
- The vehicle is in Drive or Neutral gear;
- The airbags are not deployed.

Note: In some cases, the driver may not have anticipated any braking intervention and does not want to apply the brakes whilst the forward collision system is braking heavily, the driver can temporarily cancel this operation by heavily pressing the accelerator pedal after ensuring that it is safe to do so.

The forward collision assist system will be limited or does not work in the following conditions

- There is oncoming traffic, the vehicle ahead drives across transversely or cuts suddenly;
- The vehicle ahead does not follow the rules of driving (for example, driving across lanes) and parking (on the roads transversely);
- The vehicle ahead is not on the same lane of this vehicle or is partially blocked;
- The vehicle ahead is a non-standard motor vehicle (for example, a refitted vehicle);
- The vehicle ahead is a vehicle with high chassis.
- The vehicle ahead is a large vehicle and at a close distance (such as a tractor, a trailer, a towing vehicle, a mud-carrying vehicle and a sanitation truck);
- The vehicle ahead is some means of transportation rarely can be seen on the road (such as the ox cart, carriage or others);
- The vehicle ahead is a bicycle, motorbike or small wheeled object (such as suitcases, shopping carts or wheelchairs);

- The contour of the vehicle ahead is unclear due to the water sprayed by the wheels of the surrounding vehicles;
- The vehicle ahead does not turn on the tail lamps when driving at night or in the tunnel;
- The tail lamps of the vehicle ahead are all LED lamps or other home-made fairy lights;
- When driving on the boulevard, the road lamp flashes erratically;
- The pedestrian is not directly in front of the vehicle or not fully visible;
- The pedestrian does not stand upright or is a shorter child;
- A crowd of people or the pedestrian is in the tree shadow or in the dark;
- There are animals or foreign obstacles on the ground ahead (such as a roadblock, an isolation pile, an isolation strip, big rocks, other scattered objects, etc.);
- There are signs, guardrails, bridges, buildings, etc. ahead;
- The vehicle drives on a slope, the section coming on/off the bridge or curve;
- The vehicle is in Reverse gear;
- The vehicle is in braking or harsh acceleration state;
- Obscured windscreen (by water spray, dust or sticker, etc.); camera unable to focus, camera unable to calibrate, and camera failure due to weather damage to the camera's field of view such as low sun altitude, glare, roadway water spray, icy windscreen, rain, snow, fog, etc., or system malfunction.

Lane Departure Assist System

Lane departure assist system is an auxiliary system that assists the driver, but does not replace the driver in driving. When using the lane departure assist system, the driver should always pay full attention, hold the steering wheel, and be prepared to correct the steering wheel or take over the vehicle at all times, otherwise accidents or personal injuries may be caused.

The lane departure assist system cannot always recognize the lane lines or kerbs, and sometimes may incorrectly recognize poor road surfaces, certain road structures or objects as lane lines or kerbs. When such situations occur, the lane departure assist system must be turned off immediately.

The lane departure assist system switch is located on the entertainment display. The system can be turned on/off in the appropriate Driver Assistance interface, and the mode and sensitivity, etc. can be selected.

Alarm

The system detects the lane lines ahead when the following detection conditions are met:

- The function is in ON state;
- The vehicle speed is above 60 km/h;
- The lane lines are clear, and the system detects at least one lane line;

When the wheel is about to press the lane line or has already pressed the lane line, the system will give warnings to remind the driver to correct the direction in time and keep the vehicle running within the lane lines. The function will exit when the speed is less than 55 km/h.

Alarm + Lane Departure Assist

The system detects the lane lines ahead, kerbs and vehicle in the adjacent lanes when the following detection conditions are met:

- The function is in ON state;
- The vehicle speed is above 60 km/h;
- The lane lines are clear, and the system detects at least one lane line or kerb;

If the vehicle is about to pass the lane line or on the lane line, the system will assist the driver in keeping the vehicle running within the lane lines by applying corrective steering intervention and prompting. If the vehicle deviates too much from the lane line, the warning function will be triggered at the same time. The function will exit when the speed is less than 55 km/h.

When the system applies intervention many times in a certain period of time, and monitors that the driver has kept his hands off the steering wheel, the system will give alarms.

IMPORTANT
• In the case of increased lanes, lane merges, etc., the driver is required to take active control. • In the case of complex traffic conditions (such as intersections, road sections with traffic congestion, etc.), the driver is required to take active control.

The lane departure assist system function will be limited or does not work in the following conditions:

- The driver turns on the turn signal lights at the side across the line;
- The driver turns on the hazard warning light;
- The driver presses the accelerator pedal rapidly, makes emergency steering or presses the brake pedal hard;
- The system recognizes that the driver does not manipulate the steering wheel for a period of time (in "Alarm + Departure Assist" mode);
- When the system implements the steering intervention, the driver is manipulating the steering wheel (in "Alarm + Departure Assist" mode);
- The lane line is too thin, damaged or fuzzy; the lane lines are complex;
- The kerbs are irregular or damaged;
- The vehicle is driving on the curve with a small curvature radius or on too narrow or too wide road;
- The vehicle has just entered the road section with lanes or has passed the road section without lane lines;
- The vehicle makes rapid lane change or lateral sway;

- The vehicle is not in Drive gear;
- Roads under construction, lane diversion and merging, ramps;
- The vehicle speed is less than 55 km/h, or the speed is too high;
- The anti-lock brake system (ABS) and the dynamic stability control system (SCS) are activated;
- The anti-lock brake system (ABS), dynamic stability control system (SCS), electric power steering system (EPS), etc. fail.

It is recommended to turn off the lane keeping assist system in the following situations:

- Camera obscured or unclear (smudged, frosted), camera unable to focus, camera unable to calibrate, and camera failure due to weather damage to the camera's field of view such as low sun altitude, glare, roadway water spray, icy windscreen, rain, snow, fog, etc., or system malfunction;
- Drive in sports style;
- Drive in bad weather;
- Drive on poor road section;
- Drive through road construction site;
- Scenes at night and with poor auxiliary lighting;
- Entering and exiting the tunnel (too rapid a change in light intensity).

Pedestrian Alert System (PAS)

When the vehicle is travelling at a low speed, the pedestrian alert system controls the speakers to sound to remind the pedestrians and vehicles around, thus improving the travelling safety.

The speakers sound when all of the following conditions are met:

1 The gear is in a non- P position;

2 The pedestrian alert system is not faulty;

3 The vehicle speed is 0~30 km/h.

PDC System

Ultrasonic Sensor PDC System

The purpose of the parking assist system is only to assist the driver during parking! The ultrasonic sensors may not be able to detect certain types of obstruction, e.g. narrow posts, small objects close to the ground, objects above the tailgate and some objects with nonreflective surfaces.

Keep the ultrasonic sensors free of dirt, ice and snow. If deposits build up on the surface of an ultrasonic sensor, its performance may be impaired. When washing the car, avoid aiming high pressure water jets directly at the ultrasonic sensors from close range.

Rear PDC System

The ultrasonic sensors on the rear bumper monitor the area behind the vehicle to search for obstacles. If an obstacle is detected, the system will calculate its distance from the rear of the vehicle and communicates the message to the driver by sounding warning chimes.

Front PDC System

The front bumper is also equipped with ultrasonic sensors to monitor the area ahead of the vehicle to search for obstacles. If an obstacle is detected, the system calculates its distance from the front of the vehicle and transmits the message to the driver with an audible alarm.

PDC System Operation

Front and Rear PDC Systems

The front and rear PDC systems can be enabled by the following operations:

- Select R gear;
- Tap the radar warning alarm switch;

The front and rear PDC systems can be shut off by the following operations:

- Move the shift lever to P gear;
- Vehicle speed exceeds 15 km/h.
- Tap the radar warning alarm switch;

With the PDC system function enabled, if an obstacle is detected, the audible sounds in different frequencies are transmitted (there might be blind zones).

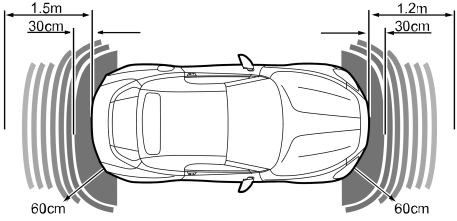

- If an obstruction is located within 1.5 m range of the rear sensor or within 60 cm range of the corner sensor, the warning sound commences. As the car moves closer to the obstacle, the warning sounds are transmitted more rapidly.
- If an obstacle is detected within 1.2 m in the front or within 60 cm at the corner, the warning sound commences. As the car moves closer to the obstacle, the warning sounds are transmitted more rapidly.
- Once the obstacle is within 30 cm range of the front or rear bumper, the warning sounds will merge into a continuous warning.

360 Around View Monitor System

The purpose of the 360 around view system is to assist the driver during parking! The cameras have a limited field of view and cannot detect obstructions outside the field of view.

Although the infotainment display can provide images around the vehicle, please still pay attention to the current actual road conditions for your driving safety.

With the 360 around view monitor (AVM) system working, the entertainment display interface will show 360 around view of the vehicle to facilitate the observation of surrounding environment and make the driving environment much safer.

You can enter the 360 around view monitor (AVM) system by the following operations:

- Select R gear.
- Touch the 360 switch on the centre console.
- Enable Auto Function ON by Turning on Turn Signal Lamp at Low Speed in the settings, and turn on the left/right turn signal lamp in "D" gear to show the left/right single view.

Note: When the shift lever is placed in D position, in no case can 360° AVM system be enabled as long as the vehicle speed is greater than about 15 km/h.

Rearward Driver Assistance System

System Overview

Specific roadside buildings or objects (such as high or oblique guardrails and plants), extreme weather conditions, weight of loads on the vehicle, complex road conditions (such as road bumps, slopes, wide or narrow roads), tunnels and road surfaces made of metal (roads or kerbs, etc. with high reflection), long moving metal objects (such as container trucks), coverings on the vehicle, etc. will affect the recognition effect of the rearward driver assistance system sensor, thus the false alarm may be issued.

The effective recognition capabilities of the rear sensors can be limited by objects such as roadside buildings, guardrails, changes in pitch angle of the car due to heavy loading, road conditions such as bends or bumps or weather conditions such as snow and ice etc. Any of the above may trigger a false alarm.

The rear driving assistance system may not provide adequate warning of very fast approaching vehicles or operate correctly on tight curves of radius.

The rearward driver assistance can only assist the driver to observe the surrounding environment and the driver should always focus attention, observe the surroundings of the vehicle and drive safely.

The correct operation of the radar sensors will be compromised if they are misaligned due to accident damage. This may cause the system to automatically shutdown.

To ensure that the radar sensors work correctly, the rear bumper should be kept free of snow and ice and must not be covered.

To ensure the normal operation of the radar sensor, the rear bumper should be kept free of ice, snow, soil, and the radar should not be obstructed.

The rear bumper is only allowed to use automotive paint certified by the manufacturer, otherwise the system functions may be restricted or defective.

Functionality is limited when the target is a pedestrian or a small low-speed target (two-wheeler, scooter).

Turning On/Off the System

The rearward driver assistance is a soft switch on the entertainment display, and the system or its subsystems can be turned on or off in its setting interface.

Blind Spot Safety Assist

Brief Introduction to Functions

The blind spot safety assist includes two active safety assist functions, Blind Spot Detection (BSD) and Lane Change Assist (LCA), which are intended to monitor the vehicles at the oblique rear and sides and give an alarm to the driver.

The Blind Spot Detection (BSD) alarms the vehicles in the blind spot of your vehicle (1); the Lane Change Assist (LCA) alarms the vehicles approaching quickly on the adjacent left or right lane (2).

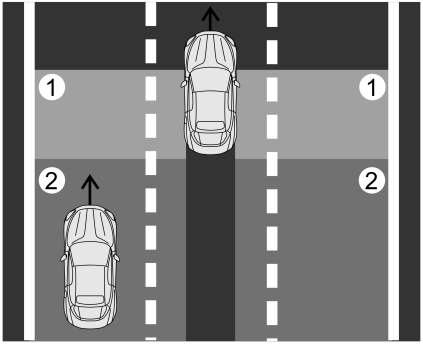

Alarm Mode

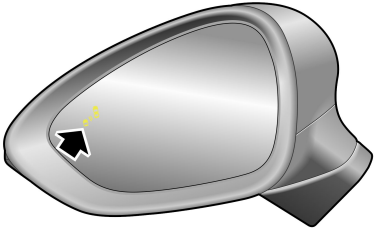

During driving (at a speed over 15 km/h), when the system detects a vehicle running in the blind spot of the rearview mirror of your vehicle or a vehicle approaching behind the adjacent lane, the warning lamp at the corresponding side will illuminate. If the direction indicator lamp at the same side is turned on, the warning lamp will flash, warning the driver that it is dangerous to continue changing lanes.

Note: The warning lamps will not illuminate whilst you are overtaking another vehicle and your speed is greater than that of the vehicle you are passing, even though it is in the blind zone.

Rear Cross Traffic Alert (RCTA) and Rear Cross Traffic Brake (RCTB)

Brief Introduction to Functions

During reversing, the Rear Cross Traffic Alert (RCTA) monitors the vehicles approaching from the left, right and rear of your vehicle through sensors, and gives an alarm when there is a risk in reversing.

The Rear Cross Traffic Brake (RCTB) is an extended function of Rear Cross Traffic Alert (RCTA). In addition to giving alarms, the system will perform emergency brake to avoid the risk of collision if the driver fails to take safety measures.

Note: The Rear Cross Traffic Brake (RCTB) will release the braking force after a brief braking stop, please take over the situation.

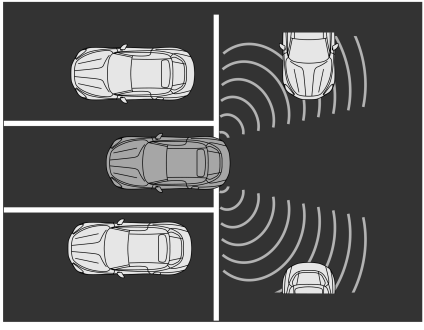

Alarm Mode

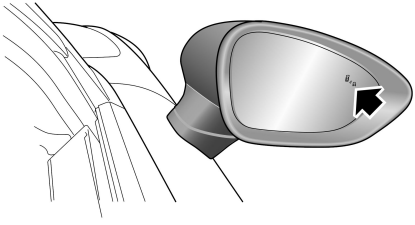

When there is a risk in reversing, the warning lamp at the corresponding side illuminates, and the instrument and centre console screen will display warning messages.

Door Opening Warning

Brief Introduction to Functions

When the vehicle is stationary, the Door Opening Warning (DOW) monitors the vehicles, riders and other targets approaching your vehicle from behind through a sensor at the rear side, and gives an alarm if there is a risk in opening the door to avoid scratching risk between the door and the targets.

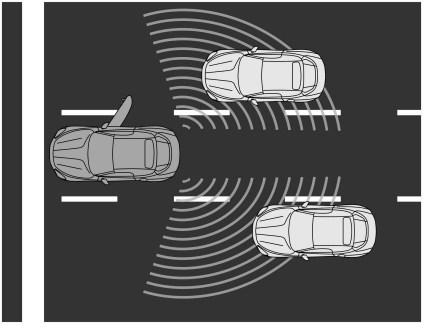

Alarm

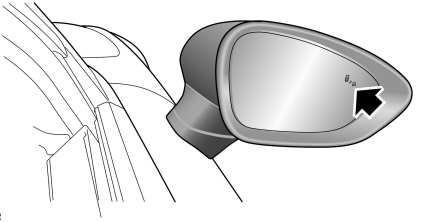

Mode

In the event of a collision risk, the warning lamp at the corresponding site illuminates. In this case, if the door opening action continues, the warning lamp will flash with acoustic alarm.

Rearward Collision Warning

Brief Introduction to Functions

During driving, when other vehicles and targets in the current lane approach your vehicle and produce collision risk, the Rearward Collision Warning (RCW) will alarm the driver that a target of risk is approaching, and also alarm the rear vehicles to run safely.

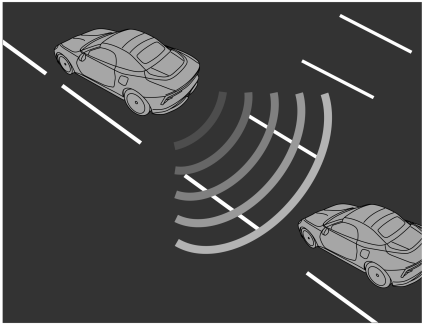

Alarm Mode

When there is a risk of collision, the instrument pack interface will give a prompt message accompanied by a warning alarm. The rear turn signal lamp of your vehicle flashes to warn the rear vehicles.

Tyre Pressure Monitoring System (TPMS)

TPMS can not replace routine maintenance and checks of the tyre condition and pressure.

Using equipment that transmits on frequencies similar to that of the TPMS may interfere with the operation of the Tyre Pressure Monitoring System, this may illuminate a warning or register a temporary fault.

TPMS monitors the tyre pressure through radio wave and sensing technique. TPMS sensor can monitor the pressure of vehicle's tyre and send it to a receiver in the vehicle. You can view the tyre pressure via the instrument pack or on-board entertainment display. TPMS can remind you of low tyre pressure, but it can not replace normal tyre maintenance. For tyre maintenance, please refer to 'Tyres' in 'Maintenance' chapter.

Note: TPMS only gives the driver a warning when the tyre pressure is low, and it will not inflate the tyre.

If the TPMS malfunction indicator lamp illuminates, and the warning message " XX Tyre Pressure Low" is displayed, it is advised that you please stop the car as soon as possible, check the tyre pressure when they are cold and inflate the tyre to the standard pressure value. The tyre pressure label attached to the pillar on the left of the driver indicates the standard pressure value required by your vehicle tyres when they are cold.

Driving with under-inflated tyres may overheat and cause tyre fault. In addition, under-inflated tyres wear out more rapidly and also have a detrimental effect on the car's handling characteristics and brake performance which, in turn, increases power consumption.

TPMS Self-learning

When replacing a TPMS sensor and receiver, or performing tyre rotation, the TPMS self-learning is required, please consult a local Authorised Repairer for details.

Load Carrying

DO NOT exceed the gross vehicle weight or the permitted front and rear axle loads. Failure may result in vehicle damage or serious injury.

Load Space

When luggage is carried in the load space, always ensure heavy items are placed as low and as far forward, as possible, so as to avoid the cargo shift in the event of an accident or sudden stop.

Drive carefully and avoid emergency braking or maneuvers when large or heavy items are carried.

IMPORTANT
Traffic regulations must be observed when loading cargo, if the cargo extrudes the loadspace appropriate warning measures must be taken to warn other road users.

Internal Loading

***DO NOT** carry unsecured equipment, tools or luggage that could move, causing personal injury in the event of an accident, or emergency braking or hard acceleration.*

***DO NOT** obstruct the driver's or passenger's vision with loads.*

Emergency Information

Hazard Warning Devices	200
eCall-SOS Emergency Assistance*	201
Vehicle Recovery	203
Jump Start	208
Tyre Repair	210
Fuse Replacement	213
Bulb Replacement	221

Hazard Warning Devices

Warning Triangle

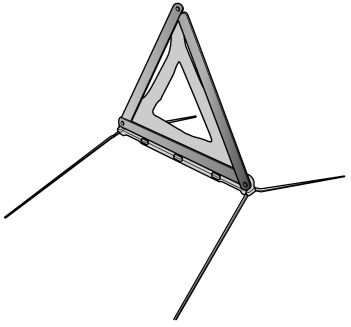

The warning triangle is placed under the trunk carpet.

If you have to stop your car on the road in an emergency, you must place a warning triangle approximately 50 to 150 metres behind the car, if possible, and press the hazard warning lamp button to warn other road users of your position.

eCall-SOS Emergency Assistance*

The eCall-SOS service is a public service of general interest and is accessible free of charge. The emergency call centre will establish verbal communication with the vehicle occupants in order to understand the extent of the emergency and the level of assistance required. If verbal communication is not achievable, an attempt will be made to send the following vehicle information message to the emergency call centre. The appropriate emergency services will be deployed to the vehicle's current location if known.

- Current time, location and direction of travel
- Vehicle fuel type
- Vehicle identification number (VIN)
- Whether the call was automatically or manually initiated
- Vehicle category
- Number of occupants

This system will ensure that your personal data is securely protected. It is designed to ensure that it is not traceable and other external systems are not able to gain access. When the eCall triggers, the system will only transmit the data information to the relevant public safety answering points designated by the respective public authorities of the country on which territory they are located, which will receive and process your emergency call request. The system will retain data locally within 13 hours of triggering.

You have the right to access the data information stored in this system, and to request the rectification, erasure or blocking of data information that does not meet the requirements of the regulations. When you think your personal data is infringed, you have the right to complain to the competent data protection authority.

In an accident, your vehicle's eCall-SOS Emergency Assistance can either be triggered manually or in severe cases automatically upon detection by vehicle's sensors. Press the SOS button in the overhead console for 1 second to manually activate an emergency services call. A single beep will be heard when the eCall is triggered and a message will be displayed on the vehicle's instrument pack and entertainment system. The entertainment system will be muted whilst the emergency services call is active. Manually triggered emergency services calls may be cancelled by pressing and releasing the SOS button again within 5 seconds of the initial press.

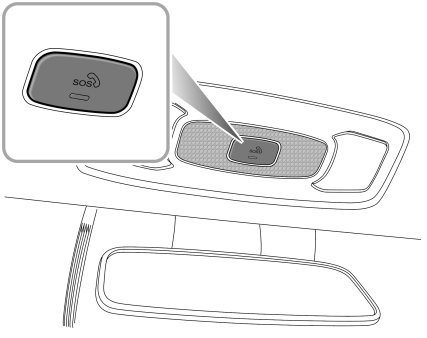

The emergency services call (eCall) system will perform a self-test when the vehicle is powered ON. The LED status indicator on SOS button will illuminate if no system faults are present. The LED status indicator will be extinguished or remain ON after flashing slowly if a fault is detected. Corresponding fault message will be displayed on the instrument pack.

Note: The automatic emergency services call (eCall) function may be disabled by a local MG Authorised Repairer upon request.

Note: It is strongly recommended the eCall function is not disabled, any action requested by the owner must be accompanied by a signed request.

Vehicle Recovery

Vehicle Towing

DO NOT tow the vehicle with all four wheels on the ground. Use only suspension towing or trailer, or the electric drive unit may be damaged. If pushing the vehicle is required in some cases, the speed shall be less than 5 km/h and the duration shall be less than 3 minutes.

When pushing or towing the vehicle for temporary situation, the driver's side seat belt should be inserted into the buckle and maintained in the inserted state, then turn the shift knob to N and release the EPB , otherwise the vehicle may be damaged.

Towing hook

DO NOT use a tow rope that is twisted - or the towing hook may be unscrewed.

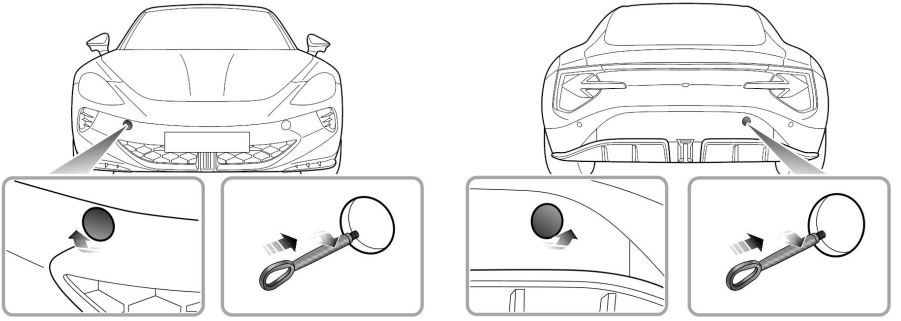

Your vehicle is equipped with a towing eye at the front and the rear, which are used for fitting the towing hook. The towing hook is placed beneath the trunk carpet. To fit the towing hook, remove the small cover. When removing the small cover on the front bumper, first press one end of the small cover, and then open it in the direction as shown after the other end is lifted. When removing the small cover on the rear bumper, pry it off in the direction as shown. Then screw the towing hook via the small hole into the threaded hole in the bumper beam (see illustration). Ensure the towing hook is fully tightened!

Note: The small cover removed may be secured to the bumper by a plastic cord.

The towing hooks can be used as the towing point to tow your vehicle when a breakdown or accident occurs. But they are not designed for towing other vehicles. The vehicle can be towed using a tow rope but a towing bar is recommended.

Towing

When towing, DO NOT accelerate or brake suddenly, this can cause accidents.

DO NOT tow the vehicle with its four wheels rotating on the ground, to avoid damaging the drive motor.

When using suspended towing method, be careful not to allow the high-voltage battery pack to touch the ground.

Suspended Towing

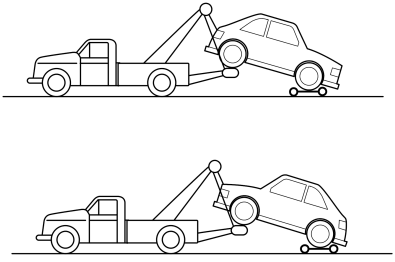

Suspended towing is the best method for recovering a vehicle that needs to be towed. When suspending, auxiliary wheels should be used to keep the wheels off the ground (some vehicles of this model are configured as rear wheel drive, some as four-wheel drive), otherwise the electric drive unit and other components may be damaged

due to the drive wheels on ground. When towing, the hazard warning lamp shall be turned on and no passengers shall be left in the vehicle being towed, otherwise the vehicle damage or personal injury may be caused.

Vehicle Transport

If your vehicle needs to be transported, a special transporter is recommended. Secure the vehicle on the transporter as follows:

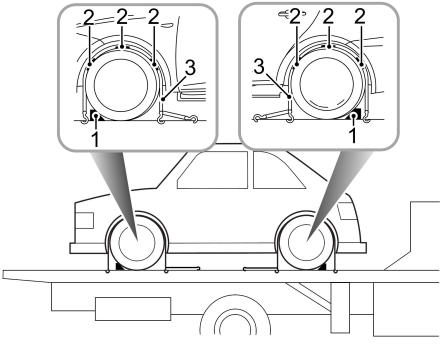

1 Before transporting the vehicle, make sure that the parking brake system is enabled. Refer to "Parking Brake System" in the "Starting and Driving" chapter for details.

2 Fit wheel chocks (1) as shown, then position the anti slip rubber blocks (2) around the circumference of the tyre.

3 Fit the lashing straps (3) around the wheels and secure to the trailer. Tighten the straps until the vehicle is securely held.

Jump Start

NEVER attempt to power the vehicle by pushing or towing.

Make sure that both batteries are of the same rated voltage (12 volts), and that the booster cables are approved for use with 12 volt car batteries.

Ensure sparks and open flames are kept well away from the front compartment.

Ensure that booster cables are firmly connected and do not touch each other or other moving parts, otherwise, sparks may be caused, resulting in fire or explosion.

In case of low battery, the vehicle can be started by using a booster cable to connect the battery of another vehicle or connecting the battery externally.

Ensure that the vehicle is powered off, and all electrical appliances of the vehicle has been turned off, then follow the instructions below:

1 Connect a red booster cable between the positive (+) terminals of both batteries. Connect the BLACK booster cable from the negative (-) terminal of the donor battery (A) to a good earth point (steering gear assembly/electric drive unit housing or other unpainted surfaces, for example) of the disabled vehicle (B), as far away from the battery as possible and bypassing the brake line.

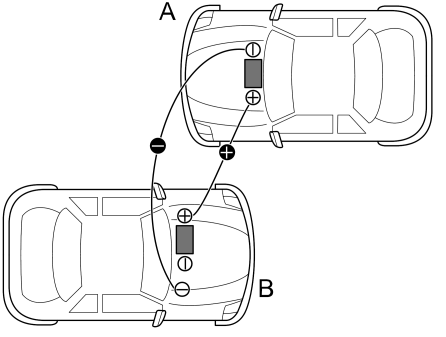

2 Start the donor vehicle and allow it to idle for several minutes.

3 Start the disabled vehicle. If the disabled vehicle will not start after several attempts, it may need to be repaired. Please contact a local Authorised Repairer for an overhaul.

4 After both vehicles are started normally, power off the donor vehicle.

5 Disconnect the booster cables. Disconnecting the booster cables must be an exact reversal of the procedure used to connect them, i.e. disconnect the black negative cable from the earth point on the disabled vehicle FIRST.

IMPORTANT
Do Not open any electrical appliances of the vehicle with low power before dismantling the jumper cable.

Note: It is recommended to turn off the lights, A/C and other comfort appliances after starting the vehicle in case of low battery, and keep the vehicle running for 1~2 hours to restore the battery level. If fully charged, the vehicle can still not be started, please contact a local Authorised Repairer for service.

Tyre Repair

Tool Identification (including tyre repair tool)

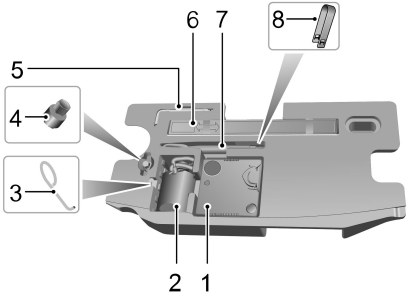

1 Electric Air Pump

2 Repair Fluid

3 Wheel Cap Removal Hook

4 Anti-Theft Bolt Key

5 Soft Top Emergency Shut-down Tool

6 Warning Triangle

7 Towing Hook

8 Wheel Bolt Cap Removal Clamp

Tyre Repair

1 Remove the label at the bottom of the repair fluid reservoir and attach it to the steering wheel to remind the driver not to exceed 80 km/h.

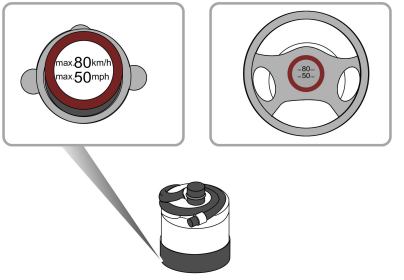

2 Connect the air hose of the electric air pump to the repair fluid reservoir. Invert the repair fluid reservoir

into the slot of the electric air pump. Remove the valve dust cap of the damaged tyre, and connect the hose connector of the repair fluid reservoir to the tyre valve. Ensure that the power switch of the electric air pump is switched off (i.e., press " o "), then connect the electric air pump plug to 12 V power socket, and turn the vehicle power system on.

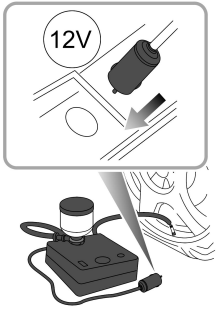

Note: To avoid battery overdischarge, please start the vehicle.

3 Switch on the power switch of the electric air pump (i.e., press " - "), to start pumping sealant into the tyre. The repair fluid reservoir will become empty after approximately 30 seconds. The tyre should reach the specified pressure within 5 or 10 minutes.

Note: When the electric air pump works, the pressure gauge may briefly reach 600 kPa (i.e. 6 bar), and then the pressure begins to drop to normal.

4 When the required pressure is reached, switch off the electric air pump (i.e., press " o ").

Note: If the required tyre pressure cannot be reached within 10 minutes, remove the tyre repair component and move the vehicle for a distance equivalent to one tyre revolution before charging the tyre; if the required pressure still cannot be reached, it indicates that the tyre is severely damaged and unrepairable, and you should seek assistance from a local Authorised Repairer.
Note: Consecutive operation of the electric air pump for more than 10 minutes may result in motor overheat and damage.
Note: It is prohibited to switch the electric air pump power on and off for several times in a row.

5 Remove the repair fluid reservoir from the slot, and disconnect the hose of the reservoir from the tyre valve. Then pull off the plug of the electric air pump from 12 V power socket.

6 Please drive the car within 1 minute upon the completion of above operations to allow the sealant to distribute evenly in the tyre, while the vehicle speed shall not exceed 80 km/h and the driving mileage not exceed 5 km. Then find a safe place to stop and recheck the tyre pressure.

If the tyre pressure has dropped to less than 80 kPa (0.8 bar), it indicates that the tyre is severely damaged and unrepairable, please contact a local Authorised Repairer.

If the tyre pressure is between 80 kPa (0.8 bar) and the specified pressure, inflate the tyre with the electric air pump until it reaches the specified pressure. Repeat Step 6 .

If the tyre pressure is equal to the specified pressure, you may continue driving, but the vehicle speed shall not exceed 80 km/h, and the driving mileage shall not exceed 200 km.

Note: Tyre repair kit is only applicable to the tyre damage caused by the pins with the diameter less than 6 mm, and it can only repair the tread and tyre shoulder, as shown in A and B .

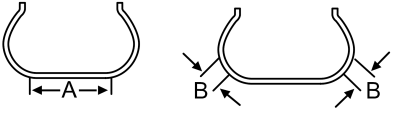

Fuse Replacement

Fuse

Fuses are simple circuit breakers which protect the car's electrical equipment by preventing the electrical circuits from being overloaded. A blown fuse indicates that the circuit under its protection fails and stops working.

If you suspect a fuse is faulty, you can take it out of the fuse box and inspect it to see if the wire in the fuse is blown.

IMPORTANT
• NEVER attempt to repair a blown fuse. ALWAYS replace a fuse with one of the same rating, otherwise the fire may be caused due to electrical system damage or circuit overload. • If a replaced fuse is blown immediately, please contact an MG Authorised Repairer as soon as possible.

It is recommended to have spare fuses in the vehicle, which can be obtained from a local Authorised Repairer.

Fuse Box

Depending on different configurations, the vehicle is equipped with 3 fuse boxes at most:

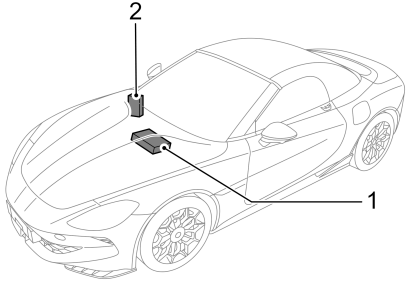

1 Front compartment fuse box (left of the front compartment)

2 Passenger compartment fuse box (behind the driver side knee trim panel)

Passenger Compartment Fuse Box

Check or replace a fuse

1 Power off the vehicle and turn off all electrical appliances, and disconnect the negative battery cable.

2 Remove the driver side knee trim panel to access the fuse box.

3 Clamp the fuse head with a fuse extraction tool in the fuse box cover of the front compartment, pull and remove the fuse, and check whether the fuse is blown.

4 If a fuse is blown, replace it with another fuse of the same type and same ampere value.

Fuse Specification

Code	Specification	Function
F1	40A	Blower
F2	5A	High-voltage electric heater
F3	7.5A	Gateway
F4	15A	Steer Wheel Heated Relay
F5	5A	Driver window regulator motor, entertainment control panel, clock spring, EPB On/Off,
F6	5A	Pedestrian Alert Control Module , T-BOX

Code	Specification	Function
F7	5A	Gear shift control unit, instrument pack display
F8	7.5A	Digital radio module, rain/light/solar sensor, front view camera module
F9	5A	Integrated charging port
F10	5A	Front Left Seat Lumbar And Massage Module , Front Right Seat Lumbar And Massage Module
F11	30A	Driver seat control module
F12	25A	Power amplifier
F13	5A	Driver Monitor System
F14	10A	Sensing and diagnostic module
F15-F17	-	-

Code	Specification	Function
F18	10A	Electronic Steering Column Lock
F19	30A	Front passenger seat control module
F20	10A	Data link connector (DLC)
F21	5A	Centre display, driver side display
F22	10A	Automatic temperature control
F23	-	-
F24	20A	Front Infotainment Control Module
F25	5A	HandRear Drive Assist Module
F26	30A	Convertible control module
F27-F32	-	-
F33	7.5A	Rear entertainment control module

Code	Specification	Function
F34	5A	Centre console display , Instrument Cluster Control Module , Around View Monitor Control Module
F35	5A	Alcohol Interlock Control Module
F36-43	-	-
F44	15A	Rear power socket
F45	5A	Right Headlamp Assembly , Left Headlamp Assembly , Headlamp Leveling Switch
F46	-	-

Front compartment fuse box

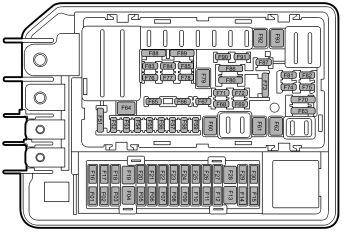

Check or replace a fuse

1 Power off the vehicle and turn off all electrical appliances, and disconnect the negative battery cable.

2 Remove the front compartment trim cover, and press the lock catch to open the upper cover of front compartment fuse box.

3 Clamp the fuse head with a fuse extraction tool in the upper cover, pull and remove the fuse, and check whether the fuse is blown.

4 If a fuse is blown, replace it with another fuse of the same type and same ampere value.

Fuse Specification

Code	Specification	Function
F1	-	-
F2	25A	Electronic oil pump controller
F3-F10	-	-
F11	5A	Left Electric Door Controller
F12	5A	Right Electric Door Controller
F13-F50	-	-
F51	15A	Horn Relay
F52	5A	Electric Vehicle Communication Controller , Active Intake Grille
F53	-	-
F54	30A	Body control module
F55	30A	Body control module
F56	-	-
F57	5A	Electric parking motor control unit
F58	30A	Body control module
F59	-	-
F60	30A	Heated rear window

Code	Specification	Function
F61	40A	Integrated braking system (IBS)
F62	30A	Crash Power Module_FR
F63	5A	PDC Sensor, Sensing Diagnostic Module, body control module, gateway,Crash Power Module_FR, Instrument Cluster Control Module
F64	30A	Body control module
F65	-	-
F66	10A	Rearview mirrors
F67	-	-

Code	Specification	Function
F68	20A	Electric parking motor control unit
F69	30A	Crash Power Module_M
F70	5A	Integrated braking system, Second-axis motor controller, intelligent motor control unit, high-voltage battery pack, electric power steering
F71-F72	-	-
F73	5A	Battery sensor, brake lamp switch
F74-F76	-	-

Code	Specification	Function
F77	15A	PEB Cooling water pump
F78	20A	High-voltage battery pack system, manual service disconnect
F79	-	-
F80	10A	Intelligent motor control unit, second axis motor controller
F81	15A	PEB Cooling water pump 2
F82	-	-
F83	15A	Battery pack coolant pump
F84	-	-

Code	Specification	Function
F85	15A	Front windscreen washer relay
F86	-	-
F87	5A	Combined charging unit (CCU)
F88	5A	High-voltage battery pack electric heater, electric A/C compressor
F89-F90	-	-
F91	30A	Body control module
F92	25A	Electronic wiper motor
F93	30A	Crash power module_FL

Code	Specification	Function
Fuse A-B	-	-
C	100A	Electric power assisted steering control module
FuseD-E	-	-
F	100A	Electric power steering
G	60A	Cooling fan
H	60A	Integrated braking system (IBS)

Bulb Replacement

Bulb Specification

The light sources of this model are all LED lamps, which cannot be replaced individually. If the light source is damaged, please seek a local Authorised Repairer.

Service and Maintenance

Maintenance *224*

Bonnet *227*

Front Compartment *229*

Cooling System *230*

Battery *232*

Windscreen Washer *234*

Wipers *236*

High-voltage Battery Pack *238*

Brake *240*

Tyres *242*

Cleaning and Vehicle Care *248*

Maintenance

Routine Servicing

The safety, reliability and performance of your vehicle willdepend partly on how well it is maintained. You mustensure that maintenance is carried out when required andaccording to the information contained in the 'Warrantyand Maintenance Handbook'.

Maintenance

After the completion of each maintenance, the next maintenance information will be reset by your local Authorised Repairer.

Note: If the maintenance is not carried out (or the display is not reset by an MG Authorised Repairer after maintenance), the maintenance display will not be able to provide correct information.

Maintenance History

Ensure your local Authorised Repairer registers the Maintenance History after each maintenance.

Fluid

Please use the fluids recommended and certified by the manufacturer. Refer to 'Recommended Fluids and Capacities' in 'Technical Data' chapter.

IMPORTANT
The use of fluids or additives that are not suitable for the vehicle may damage parts or equipment. For more information, please consult an MG Authorised Repairer.

Owner Maintenance

Any significant or sudden drop in fluid levels, or uneven tyre wear, should be reported without delay to MG Authorised Repairer.

In addition to the maintenance referred to previously, some simple checks must be carried out more frequently.

Daily Check

- Operation of lights, horn, wipers, washers and warning lights.
- Operation of seat belts and brakes.

- Look for fluid deposits underneath the car that might indicate a leak.
- Check tyre appearance.

Weekly Check

- Coolant levels.
- Brake fluid level.
- Windscreen washer fluid level.
- Tyre pressure.
- Operate air conditioning.

Special Operating Conditions

If your vehicle is frequently used in dusty conditions, oroperated in extreme climates where sub-zero or very high ambient temperatures are normal, more frequent attention may need to be paid to maintenance requirements. You need to carry out special maintenance operations (referto Warranty and Maintenance Handbook or contact your local Authorised Repairer).

Safety in the Garage

Note: Cooling fans may commence operating after the vehicle is switched off, and continue operating for a number of minutes. Keep clear of all fans while working in the front motor compartment

If you need to carry out maintenance, observe the following safety precautions at all times:

- If the vehicle has been driven recently, DO NOT TOUCH cooling system components until the drive motor is fully cooled.
- DO NOT TOUCH electrical leads or components when the power is on.
- DO NOT work underneath the vehicle with a jack as the means of support.

- Wear protective clothing and work gloves.
- Remove watches and jewelery before working in the front compartment.
- DO NOT allow tools or metal parts of the car to make contact with the battery leads or terminals.

Toxic Liquid

Fluids used in the vehicle are poisonous and shall not be swallowed or brought into contact with open wounds.These include: battery acid, coolant, brake fluid and windscreen washer fluid.

For your own safety, ALWAYS read and obey allinstructions on labels and containers.

Bonnet

Opening the Bonnet from Inside

DO NOT drive when the bonnet is not closed or retained only by the safety catch.

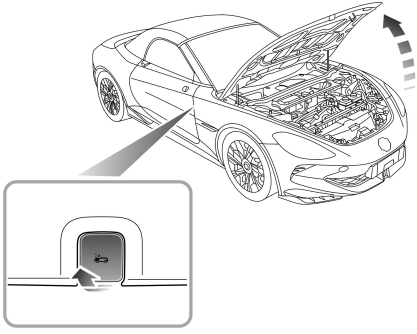

1 Pull the bonnet opening handle from inside the vehicle 2 consecutive times.

2 Raise the bonnet to open it.

Closing the Bonnet

Lower the bonnet to the bonnet lock position.

Press the lock catch position twice in succession to fully engage it.

Note: Beware of injury to hands while closing the bonnet.

Bonnet Open Alarm

If the bonnet is not fully locked, when the vehicle is powered on, the corresponding alarm icon will be displayed on the message centre display. If it is found that the bonnet is not fully locked while driving, an audible warning will sound.

Opening the Bonnet from Outside

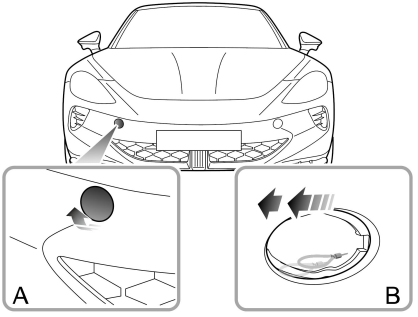

1 Remove the bonnet opening hole on the front bumper (A).

2 Pull the bonnet cable twice in succession (B).

3 Raise the bonnet to open it.

Front Compartment

While working on parts inside the front compartment, always observe the safety precautions listed in "Safety in the Garage". Refer to "Maintenance" in this section.

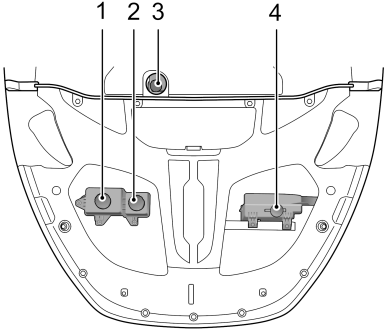

1 Electric drive transmission coolant expansion tank (black cap)
2 High voltage battery pack coolant expansion tank (black cap)
3 Brake fluid reservoir (black cap)
4 Washer fluid reservoir (black cap)

Cooling System

Coolant Check and Top Up

DO NOT remove the coolant pressure cap when the cooling system is hot - escaping steam or hot coolant could cause serious injury.

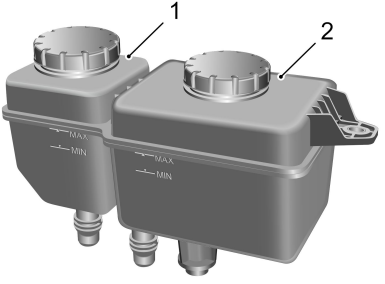

1 High Voltage Battery Pack Coolant Expansion Tank

2 Electric Drive Unit Coolant Expansion Tank

It is recommended that the cooling system should be checked weekly when the cooling system is cold and with the vehicle resting on level ground. If the coolant level is below ' MIN ' mark, remove the coolant expansion reservoir cap and add coolant, but the level shall not be higher than ' MAX ' mark.

Prevent coolant from coming into contact with the vehicle body when topping up. Coolant will damage paint.

If the coolant level falls appreciably during a short period, which is suspected to have leakage, please go to an MG Authorised Repairer for service in time.

Coolant Specification

Coolant is poisonous and can be fatal if swallowed - keep coolant containers sealed and out of the reach of children. If accidental contact of coolant by children is suspected, seek medical assistance immediately.

Prevent the coolant from coming into contact with the skin or eyes. If this occurs, rinse immediately with plenty of water. If eyes are still red, painful or uncomfortable, seek medical attention immediately.

Please use the coolant recommended and certified by the manufacturer. Refer to "Recommended Fluids and Capacities" in "Technical Data" chapter.

Note: Refilling of any additives inapplicable to this car into coolant may damage the components to be protected. You are recommended to use the additives certified by the manufacturer, please consult an MG Authorised Repairer for details.

Battery

Battery Maintenance

DO NOT use on-board electrical appliances for an extended period of time when the vehicle is not started, otherwise the battery may become flat, resulting in the failure to start the vehicle and the reduction of battery life.

Always store batteries upright, and never attempt to dismantle a battery.

The battery is located in the front compartment and designed to be maintenance free, so topping-up is unnecessary.

According to the current load condition and the status of the battery, the system may limit the power of some electrical appliances, please start the vehicle as soon as possible to charge the battery.

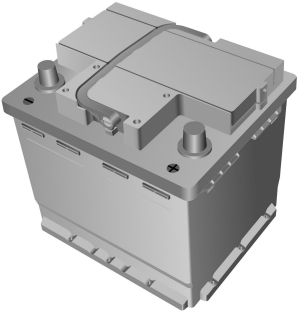

Note:

When the vehicle will not be used for an extended period, it is recommended that the battery negative terminal clamping pile head should be disconnected.

Make sure that the vehicle is powered off before connecting or disconnecting the negative battery cable.

When reconnecting the negative battery cable, ensure that the clamping pile head and the negative battery cable are securely secured.

When the vehicle will not be used for a long period of time without disconnecting the negative battery cable, it is recommended that the vehicle be driven or idled for more than half an hour per week to help prolong the life of the battery.

Battery Replacement

The battery contains sulphuric acid, which is corrosive.

Please contact a local Authorised Repairer to remove and refit the battery. Only fit a replacement battery of the same type and specification as the original to maintain the correct vehicle functionality.

The battery must be disposed of using an approved method, used batteries can be harmful to the environment. It should be recycled by a professional company. Please consult a local Authorised Repairer for more details.

Windscreen Washer

The windscreen washer is located behind the headlamp on the front compartment, which can inject the washer fluid onto the windscreen, and the wiper removes the dust and dirt from the windscreen, so that the driver has a good field of view.

Washer Fluid Check and Top Up

DO NOT allow washer fluid to come into contact with naked flames or sources of ignition since washer fluid is flammable.

When filling the washer fluid, DO NOT let the washer fluid spill on parts around the powertrain or on the paint surface of vehicle body. In case the washer fluid is spilled on hands or other parts of the body, please immediately wash with clean water.

The washer fluid is used to clean the windshield. Check the washer fluid level regularly. When the level of washer fluid is low, please top up the washer fluid as instructed. Please use the washer fluid recommended and certified by the manufacturer. Refer to 'Recommended Fluids and Capacities' in 'Technical Data' chapter.

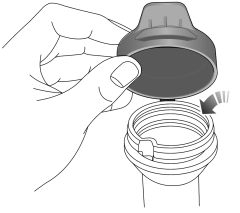

Note: DO NOT use an anti-freeze or acid solution (such as diluent of vinegar) in the fluid reservoir - anti-freeze will damage paintwork while acid solution will damage the washer motor.

IMPORTANT
• Use the washer fluid recommended and certified by our company. Misuse of washer fluid in winter may cause damage to the washer motor due to freezing. • Using the washer switch when there is no washer fluid may cause damage to the washer motor. • Operating the wipers when the windscreen is dry and there is no washer fluid may cause damage to the windscreen and wiper blades. Please spray the washer fluid and start the wipers when there is adequate washer fluid.

Washer Nozzles

The front windscreen washer nozzle is located on the A/C air intake grille panel in the front compartment, and is configured during the factory settings, so generally there is no need for adjustments. To adjust the washer nozzle, you can insert a small flat-bladed screwdriver in the gap (the black area indicated by the arrow) between the housing (1) and the nozzle (2) and turn the nozzle downward or upward slightly to obtain an appropriate injection angle.

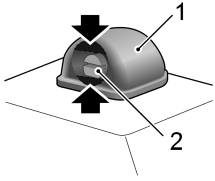

Operate the washer to spray water periodically to check if the washer nozzles are clean and in the correct direction. If the nozzle is obstructed, insert a needle or thin metal wire into the hole to remove the obstruction.

Wipers

The function of the wiper is to remove rain, snow or dust from the windscreen to ensure good visibility for the driver.

IMPORTANT
• Grease, silicon and petroleum products impair the blade's wiping capability. Clean the wiper blades in warm soap water, and check their status periodically. • Clean the windscreen frequently. DO NOT use wiper blades to remove stubborn or ingrained dirt, it will reduce their effect and their life span. • If signs of hardness or cracking in the rubber are found, or if the wipers leave streaks or unwiped areas on the windscreen, then the wiper blades should be replaced. • Clean the windscreen regularly with an approved glass cleaner and ensure the windscreen is thoroughly cleaned before the replacement of wiper blades. • Only fit the wiper blades that are identical to the original specification. • Clean ice and snow from the wipers and ensure they are not frozen or otherwise, sticking to the windscreen before attempting to operate them.

Front Windscreen Wiper Blade Replacement

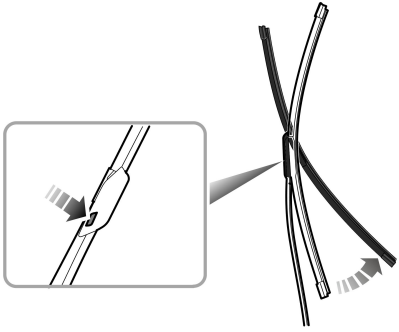

To replace the windscreen wiper blade, put it in the service position before operation.

1 With the bonnet closed, tap the icon on the entertainment display and select "Status - Power Off". Within 20 seconds after power-off, press down the wiper stalk switch to Single Wipe position (see 'Wipers and Washers' in 'Instruments and Controls' section) and release, the wiper will automatically move to the service position and stop on the windscreen.

2 Lift the wiper arm away from the windscreen.

3 Press the button on the wiper arm (as illustrated), and pull the upper end of the wiper blade outward to disengage from the wiper arm.

4 Unhook the blade from the wiper arm and discard.

5 Locate the new wiper into the slot of the wiper arm.

6 Push the wiper blade towards the wiper arm until the wiper blade is fully embedded.

7 Put the wiper assembly back onto the windscreen, and check whether the wiper blade is fixed correctly onto the wiper arm.

8 When the vehicle is powered on (refer to "Starting and Stopping Power System" in the chapter "Starting and Driving"), the wiper will exit the service mode and automatically return to its original position.

High-voltage Battery Pack

Precautions and restricted conditions for use of battery

If the vehicle is parked for a long time, it shall be charged at least once every 3 months (the battery power shall remain above 50% on the instrument pack after charging).

It is strictly prohibited to park the vehicle for more than 7 days when the high-voltage battery pack is low in charge (there is no effective mileage display on the instrument panel).

Failure to follow these guidelines will result in HV battery damage and invalidate the warranty.

Do not attempt to disassemble the high-voltage battery pack or any high-voltage components - these are dangerous. Any traces of disassembly or damage caused by attempted disassembly will void the warranty.

1 DO NOT park the vehicle in conditions where the ambient temperature exceeds 45°C for more than 15 days. This will effect the performance and service life of the high voltage battery.

2 To better extend the service life of high-voltage battery pack, it is recommended to charge the vehicle with slow charging. Fast charging is mainly used for long distance journeys or emergencies.

3 Where possible it is recommended that you carry out a slow charging (equalisation charging) every month to extend the service life of high-voltage battery pack. The battery management system will monitor the status of the high-voltage battery pack. After monitoring for a period of time, if an equalisation charge has not been carried out for some time the message centre in the instrument pack will display

'Please Slow-charge the Vehicle'. At this time you must carry out an equalisation charge. For operation mode, please refer to 'Equalisation Charging' in 'Starting and Driving' chapter.

4 When an accident causes damage to the high-voltage battery pack or any of its related components, or any repairs are made to the high voltage system, the vehicle must be inspected at a local Authorised Repairer.

5 If the vehicle body is damaged due to an accident and should be repaired, in order to avoid damage to the high-voltage battery pack, please contact a local Authorised Repairer, and conduct related operations after removing the high-voltage battery pack.

IMPORTANT
Only fully trained and qualified personel are allowed to work on the high voltage systems and components of this vehicle. Any disassembly of such systems or components is strictly prohibited.

Brake

DO NOT rest your foot on the brake pedal while driving; this may overheat the brakes, reduce their efficiency and cause excessive wear to the brake components.

The free travel of brake pedal is in the range of 0 ~ 8 mm.

Reasonable usage scope of brake friction pair: no less than 3.8 mm for the thickness of front brake pad; no less than 2 mm for the thickness of rear brake pad; 28 ~ 30 mm for front brake disc, and 23 ~ 25 mm for rear brake disc.

For the first 1500 km, you should avoid situations where heavy braking is required.

Note that regular servicing is vital to ensure that all the brake components are examined for wear at the correct intervals, and replaced when necessary to ensure long-term safety during the interval prescribed in Warranty and Maintenance Manual.

The vehicle needs to run in for 800 km after the brake pad or disc is replaced.

Brake Fluid Check and Top Up

Brake fluid is highly toxic, keep the brake fluid sealed and stored out of reach of children. If accidental contact of brake fluid is suspected, seek medical attention immediately.

Prevent brake fluid coming into contact with the skin or eyes. If this occurs, rinse immediately with plenty of water. If eyes are still red, painful or uncomfortable, seek medical attention immediately.

The brake fluid level should be checked weekly when the system is cold and with the car on level ground. Clean the cover first before opening the brake fluid reservoir.

The brake fluid level can be seen through the reservoir and should be maintained between the " MAX " and " MIN " marks.

Note: Do not allow the brake fluid level to drop below the "MIN" mark or rise above the " MAX " mark.

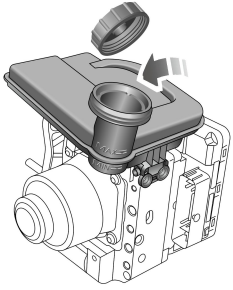

Note: Brake fluid will damage painted surfaces. If you accidentally spill the brake fluid on the painted surface, soak up any spillage with an absorbent cloth immediately and wash the area with water or car shampoo.

Brake Fluid Specification

Use the brake fluid recommended and approved by SAIC Motor. Refer to "Recommended Fluids and Capacities" in the "Technical Data" chapter.

IMPORTANT
Replace brake fluid regularly according to service schedule.

Tyres

Overview

Your vehicle is equipped with summer tyres which are not suitable for long-term use and storage at low temperatures. Because low temperatures may lead to a decrease in summer tyre's performance, and even cracks may appear on the tread. The damage of a tyre or rim may happen unnoticeably. If abnormal vibration or deviation is experienced, that means the tyre may have been damaged. If you suspect that the tyres are damaged, please be sure to immediately reduce the speed, and stop to check the tyres for damage. If you can't see any damage from the outside, you shall drive at low speed to the nearest Authorised Repairer for inspection.

During the use of tyres and wheels, attention should be paid to:

- New tyres may not have optimum adhesion properties, please run at moderate speed in appropriately careful driving style for the first 500 km.
- You can only drive at low speed when passing kerbs or similar sections, and pass the wheels through the kerbs at right angle as far as possible.
- Regularly check tyres for damage (punctures, scratches, cracks and pits) - remove any foreign objects from the tread.
- The valve dust cap must be fitted to prevent dust from entering the valve.
- If the tyre is to be removed, always mark the tyre/wheel orientation to ensure correct reinstallation.
- Store the removed wheel or tyre in a cool, dry and dark place.

Tyres with Directional Tread Patterns

The profile of tyres with directional tread patterns is marked with an arrow, and you must use the tyres in this specified direction of rotation. Thus the optimized tyre rideability in preventing hydroplaning, improving adhesive ability, reducing running noise, extending wear life, etc. can be ensured.

Service Life of Tyres

Rational tyre pressure and moderate driving style can extend tyre life. Recommendations during use are as follows:

- Check the tyre pressures at least once a month, it should be carried out when the tyre is cold;
- Avoid cornering at excessive speeds;
- Regularly check tyres for abnormal wear patterns.
- When the vehicle is to be parked for a long time, please move it at least once every two weeks and check the tyre pressure to prevent deformation of the tyres due to long-term stress.

The following factors affect the tyre life:

Tyre Pressure

Over or under-inflated tyres will cause the abnormal wear of the tyre, greatly shorten the service life, and have an adverse effect on the driving characteristics of the vehicle.

Driving Style

Fast driving, excessively harsh acceleration and braking whilst cornering will aggravate the tyre wear.

Wheel Balance

The wheels of a new vehicle are subject to dynamic balance testing, but out of balance wheels may still be caused due to the effects of various factors in operation.

If wheels are out of balance, shaking or vibration of the steering mechanism may occur and the tyres may start to wear excessively. It is important to restore wheel balance as quickly as possible. Each wheel should be rebalanced after fitting a new tyre or having a tyre repair.

Wheel Alignment Defect

Incorrect wheel alignment can cause excessive tyre wear and affect vehicle safety. If the tyres show signs of abnormal wear, check the wheel alignment and seek advice from a local Authorised repairer.

Tyre Inspection

USE OF DEFECTIVE TYRES ARE DANGEROUS! DO NOT drive if any tyre is damaged, excessively worn, or inflated to an incorrect pressure.

It is recommended to install the tyres consistent with the original specifications. DO NOT replace the tyres with tyres of any other type. Alternative tyres, of a different specification, may adversely affect the vehicle's driving characteristics and safety. For better guarantee of your safety, we recommend you consult a local Authorised Repairer.

Always drive with consideration for the condition of the tyres, and regularly inspect the tread and side walls for any sign of distortion (bulges), cuts or wear.

Note: Prevent tyres from coming into contact with oil, grease and fuel.

Tyre Pressure

Before a long distance journey, the tyre pressure must be checked.

Check the pressures at least every month, when the tyres are cold.

If it is necessary to check the tyres when they are warm, you should expect the pressures to have increased by 30 ~ 40 kPa (i.e. 0.3 ~ 0.4 bar). In this circumstance, NEVER let air out of the tyres in order to match the recommended pressures (cold) in the technical data.

Valves

Keep the valve caps firmly secured to prevent dirt from entering the valve. Check the valve for leaks (listen for a tell-tale hissing) when you check the tyre pressure.

Punctured Tyres

Your vehicle is fitted with tyres which may not leak if penetrated by a sharp object, provided the object remains in the tyre. If you are aware of this occurring, reduce speed immediately and drive with caution until the spare wheel can be fitted, or repairs undertaken.

Note: If the sidewall of the tyre is damaged or distorted, replace the tyre immediately, do not attempt to repair it.

Tyre Wear Indicators

The tyres fitted as original equipment have 1.6 mm-high wear indicators at their tread pattern bottom, vertical with the wheel rolling direction and evenly distributed around the circumference. The mark on the tyre side such as capital letters TWI or triangular symbol shows the location of wear indicator.

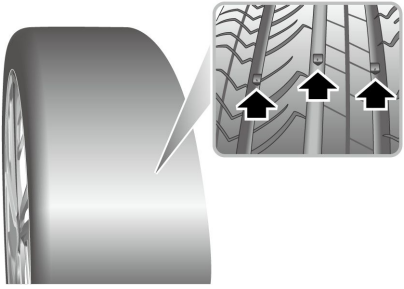

When the tread has worn down to 1.6 mm or below, the indicators will come to the surface of the tread pattern, producing the effect of a continuous band of rubber across the width of the tyre.

IMPORTANT
A tyre MUST be replaced as soon as a wear mark becomes visible. Otherwise there may be a risk of accidents.

Tyre Rotation

It is recommended that you swap wheels at irregular intervals in order to equalise tyre wear.

Note: The front and rear tyre rotation applies to the vehicles with the same front and rear wheel specifications. Do not perform tyre rotation when the front and rear wheel specifications are inconsistent.

When the specifications of front and rear wheels of your vehicle are the same, if the tyres are worn seriously, it is recommended to swap the front and rear wheels as shown in illustration. This can prevent tyres from uneven wear, prolong the life span and balance tyre fatigue.

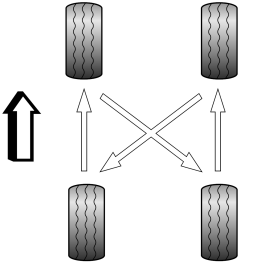

Note: Directional tyres (identified from the arrow on the tyre side) CANNOT be swapped from side to side.

Note: The TPMS self-learning is required after tyre rotation, please consult a local MG Authorised Repairer for details.

Anti-skid Chain

Unsuitable anti-skid chains may damage the tyres, wheels, suspension, brakes or bodywork of your vehicle.

Please pay attention to the following requirements in the usage:

- The anti-skid chains can only be fitted on the rear drive wheels (please note that some vehicles of this model are equipped with rear-motor rear-wheel drive and some are equipped with four-wheel drive, both of which should be fitted with the anti-skid chains on the rear wheels);
- The thickness of anti-skid chains shall not exceed 15 mm;
- Please always observe the installation and tension instructions for the anti-skid chains, as well as the speed limitations of different roads;
- Do not drive faster than 50 km/h;
- To avoid the tyre damage and excessive wear of the anti-skid chains, the anti-skid chains must be removed while driving on the road without snow.

Size and Specifications of Wheels and Tyres Supporting Anti-skid Chains for This Vehicle	
Wheel Rim Size	9.5J×19
Tyre Size	275/40 R19

Note: Before purchasing anti-skid chains, ensure that the specifications of wheel rim and tyre are consistent with those in the above table to avoid failure to fit the anti-skid chains.

Note: If you often drive on low-temperature, cold or snowy and icy roads, it is recommended to use winter tyres. Consult a local Authorised Repairer for details.

Cleaning and Vehicle Care

Follow all safety precautions for cleaning products, DO NOT drink and DO NOT touch your eyes.

Automobile External Care

Vehicle Cleaning

ONLY wash your vehicle when it is powered-off, or electrical hazard may happens.

DO NOT use a high pressure hose to clean the front compartment - damage to the car's electrical systems may occur.

To maintain your vehicle's finish, observe the following precautions:

- Do not wash the vehicle with hot water;
- Do not use detergents or washing liquids;
- Do not wash your vehicle in direct sunlight in hot weather;
- When using a hose, do not direct water at windows, doors, or through wheel holes onto brake parts.

If the vehicle is particularly dirty, use the hose to rinse dirt and grit from the body before washing. Then, wash the vehicle with cold or lukewarm water containing a good quality cleaning wax. Be sure to use plenty of water to ensure that the grit is rinsed from the surface of the vehicle and not ground into the paintwork. After washing, rinse the body with clean water and dry with a chamois leather.

Note: It is recommended that the camera be protected while the vehicle is being washed to avoid damage to the surface of the vehicle and the camera from car wash equipment, brushes or or hard objects such as small stones that may be contained therein.

Cleaning the Underbody

DO NOT use a high pressure hose to clean the front compartment - damage to the car's electrical systems may occur.

From time to time, especially during the winter months when salt is used on the roads, wash the underbody of the vehicle with a hose. Flush away any mud that has built up and thoroughly clean areas where debris can easily collect (e.g. wheel arches and panel joints).

IMPORTANT

- Avoid cleaning the vehicle in direct sunlight.
- When cleaning the vehicle in winter avoid spraying water directly onto door locks and panel gaps due to risk of icing.
- Do not use rough sponges or cloth to clean the car, this will damage the paintwork finish.
- When cleaning the headlamps do not use a dry cloth or sponge, use only warm soapy water.

Cleaning with High Pressure Cleaner

Read the manufacturer's operating instructions frequently.

You must abide by the operation instructions for cleaning the vehicle with a high pressure cleaner, especially the pressure and jet distance should be kept in an enough distance from the flexible material (such as rubber hose or sound insulation).

Note: DO NOT direct the pressure washer nozzle directly toward the high voltage components or high voltage connections.

IMPORTANT

- Always read the manufacturers operating instructions.
- DO NOT direct the pressure washer nozzle directly toward the high voltage charging point or high voltage battery connections on the underside of the vehicle.

Polishing the Paintwork

Occasionally treat painted surfaces with an approved polish that has the following properties:

- Very mild abrasives to remove surface stains without removing or damaging the paint.
- Filling compounds that will fill scratches and reduce their visibility.
- Wax to provide a protective layer between the paint and the coating.

Note: If possible, avoid glazing or waxing the window glasses and rubber seals.

Wiper Blades

Wash in warm soapy water. DO NOT use spirit or petrol based cleaners.

Windows and Rearview Mirrors

Regularly clean all windows, inside and out, using an approved glass cleaner.

Windscreen:Clean the outside of the windscreen with glass cleaner before fitting new wiper blades.

Rear screen:Clean the inside with a soft cloth, using a side to side motion to avoid damaging the heating elements. DO NOT scrape the glass or use abrasive cleaning compositions – this will damage the heating elements.

Rearview mirrors:Wash with soapy water. DO NOT use abrasive cleaning compositions or metal scraper.

Plastic Parts

Plastic parts can be cleaned by the conventional method of cleaning. When the stain is not easy to remove, you can use special curing agent for treatment, and the paint curing agent is not preferable for treatment of plastic parts.

Paint Damage

Any paint damage or stone chips should be treated immediately with a suitable pigment/paint material to avoid voiding the anti-corrosion warranty.

Weather Strips

If the weather strips or rubber hole seals have been cleaned with a strong detergent, they should be treated with a suitable material (e.g. silicone), which will prevent sticking and maintain the service life of the seal.

Wheels

When cleaning the wheels any materials orwater that contact the brake.

To keep the wheels in optimum condition, they should be cleaned regularly.

Use only recommended non-acidic specialized wheel cleaners. Always read the product instructions.

Automobile Internal Care

Plastic Parts

Clean the plastic surface material with diluted upholstery cleaner, then wipe with a damp cloth.

Note: DO NOT polish dashboard components – these should remain non-reflective.

Carpet and Fabrics

Before using diluted upholstery cleaner, test a concealed area first.

Leather

Clean leather trim with warm water and a non-detergent soap. Dry the leather with a dry, clean, lint-free cloth.

Note: DO NOT use petrol, detergents, furniture creams or polishes as cleaning agents.

Instrument Pack and Entertainment Display

Clean only with a soft, dry cloth; do not use cleaning solutions or sprays.

Airbag Covers

DO NOT allow these areas to be flooded with liquid and DO NOT use petrol, detergent, furniture cream or polishes.

To prevent damaging airbags, only use one wet cloth and upholstery cleaner to carefully clean the following areas:

- Steering wheel centre pad.
- Area of dashboard containing the passenger airbag.

Seat Belts

DO NOT use bleaches, dyes or cleaning solvents on seat belts.

Extend the belts, then use warm water and a non-detergent soap to clean. Allow the belts to dry naturally. DO NOT retract them or use them until they are completely dry.

Technical Data

Technical Data Dimensions *254*

Complete Vehicle Mass Parameters *256*

Parameters of Traction Motor *257*

Dynamic Performance Parameters *258*

Recommended Fluids and Capacities *259*

Wheel Alignment (unladen) *261*

Wheels and Tyres *262*

Tyre Pressure (Cold) *263*

Technical Data Dimensions

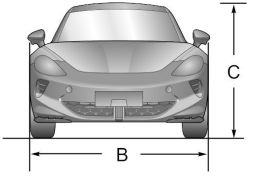

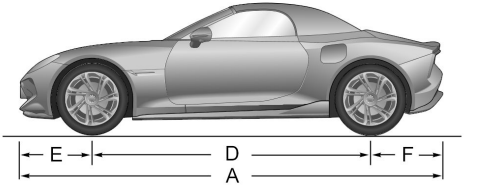

Item, units	Parameters
Overall length A , mm	4535
Overall width B , mm	1913
Overall height C (unladen), mm	1329
Wheelbase D , mm	2690
Front overhang E , mm	955
Rear overhang F , mm	890

Item, units	Parameters
Front wheel track, mm	1616
Rear wheel track, mm	1629
Minimum ground clearance, mm	105.6 (64KWh&77KWh 2WD) 106.7 (77KWh 4WD)
Minimum turning circle diameter, m	10.9

Note: Vehicle length not including the license plate.

Note: Rearview mirrors and the deformed portion of tyre wall directly above the touchdown point are not included in the total width.

Complete Vehicle Mass Parameters

Item, units	Parameters		
	64 KWh	77KWh	77KWh 4WD
Person in cab, person	2		
Unladen vehicle weight (kerb), kg	1850	1885	1985
Gross vehicle weight, kg	2075	2110	2210
Unladen front axle weight, kg	898	915	988
Unladen rear axle weight, kg	952	970	997
Laden front axle weight, kg	973	990	1063
Laden rear axle weight, kg	1102	1120	1147

Parameters of Traction Motor

Item, Units	Front tractionmotor *	Rear tractionmotor	
		64kWh	77kWh
Traction motortype	Three-phase permanent magnet synchronous motor		
Rated Power/Peak Power , kW	75/150	150/231	160/250
Peak Torque , Nm	250	475	
Rated Speed/MaximumSpeed, rpm	10000/17000	7000/17000	8000/17000
Waterpro of Grade	IP67		

Dynamic Performance Parameters

Item, units	Parameters		
	64KWh	77KWh	77KWh 4WD
Maximum speed, km/h	193	195	200
Gradeability, %	30	30	30

Note: The driving range is an approximate value measured when a new vehicle is driven at normal temperature with A/C OFF and the battery fully charged.

Recommended Fluids and Capacities

Name	Grade	Capacity	
		2WD-64kWh	2WD-77kWh
High-voltage battery pack coolant, L	Glycol (OAT)	4	4
Electric drive unit coolant, L		4.8	4.8
Rear electric drive unit fluid, L	Shell E-Fluids E6 iX	2.35	
Brake fluid, L	DOT 4	0.8	
Washer fluid, L	MG genuine windscreen washer fluid	2.5	
Air conditioning refrigerant, g (UK)	R-1234yf	540±20	
Air conditioning refrigerant, g (AUS/NZ)	R-134a	540±20	

Name	Grade	Capacity
		4WD
High-voltage battery pack coolant, L	Glycol (OAT)	4
Electric drive unit coolant, L		5.4
Front electric drive unit fluid, L	Shell E-Fluids E6 iX	1.1
Rear electric drive unit fluid, L		2.35
Brake fluid, L	DOT 4	0.8
Washer fluid, L	MG genuine windscreen washer fluid	2.5
Air conditioning refrigerant, g (UK)	R-1234yf	540±20
Air conditioning refrigerant, g (AUS/NZ)	R-134a	540±20

Wheel Alignment (unladen)

Item, units		Parameters
Front Wheel	Camber angle	-0°50¢±45¢
	Castor angle	6°10¢±45¢
	Toe-in angle (total toe-in)	0°00¢±12¢
	King pin inclination	8°45¢±45¢
Rear Wheel	Camber angle	-1°30¢±30¢
	Toe-in angle (total toe-in)	0°4¢± 12¢

Wheels and Tyres

Wheel Rim Size	Front 8J×19	Front 8.5J×20
	Rear 9.5J×19	Rear 9.5J×20
Tyre Size	Front 245/45 R19 102W	Front 245/40 R20 99W
	Rear 275/40 R19 105W	Rear 275/35 R20 102W

Tyre Pressure (Cold)

Wheels	Half-load	Laden
Front Wheel	250 kpa/ 2.5 bar/ 37 PSI	250 kpa/ 2.5 bar/ 37 PSI
Rear Wheel	250 kpa/ 2.5 bar/ 37 PSI	250 kpa/ 2.5 bar/ 37 PSI