MG ZS EV

ZS EV Owners Manual

Contents

Preface **1**

Introduction **1**

The Owner's Handbook 1

Status at Time of Printing 1

Symbols Used 2

Vehicle Identification Information **3**

Vehicle Identification 3

Vehicle Identification Label 4

Instructions for Use of Electric Vehicle **6**

Effects of Ambient Temperature 6

Instructions for High Voltage Battery Pack Recycling 6

Driving Range 7

Equalisation Charging 8

Intelligent Charging 8

Crash Outage Control 9

High Voltage System 9

Precautions in the Event of an Accident 11

Button/coin Battery Safety **12**

1 Instruments and Controls 13

Instrument Pack 14

Information Centre 16

Warning Lights and Indicators 25

Lights and Switches 36

Master Lighting Switch 36

Headlamp Levelling Manual Adjustment 38

Main Beam Switch 39

Direction Indicator Switch 42

Fog Lamp Switch 42

Hazard Warning Lamp 43

Wipers and Washers 44

Windscreen Wiper Operation 44

Rear Window Wiper Operation 46

Steering System 48

Adjustment of Steering Column 48

Electric Power Steering 48

Horn 50

Rearview Mirrors **51**
Exterior Door Mirrors 51
Manual Anti-dazzle Interior Rearview Mirror 53
Sunvisor **54**
Windows **55**
Window Operation 55
Sunroof * **57**
Instructions 57
Sunroof Operation 58
Interior Light **63**
Power Socket **64**
Front Power Socket 64
Rear USB Ports 65
Top USB Port 65
Wireless Charging System for Mobile Phones * **67**
Wireless Charging of Mobile Phones 67
Storage Devices **69**
Instructions 69

Glove Box 69
Centre Console Armrest Box 70
Loadspace 70
Glasses Box 71
Cup Holder 72
Centre Console Cup Holder 72
Roof Luggage Rack * 73
Maximum Authorised Load for the Roof 73
Periodical Check 73
2 Air Conditioning 75
Ventilation 76
A/C Filter 77
Vents 77
A/C Control Panel 79
Control Panel 79
A/C Control Shortcut 79
Defrost/Demist 79
Heated Rear Window 80

Blower Speed Control Button 80
Temperature Control Button 80
A/C Control Interface 81
Control Interface - Connected Car * 81
Control Interface - Non Connected Car * 82
Temperature Control 83
Cooling On/Off 83
Auto Mode 83
System On/Off 83
Blower Speed Control 83
Air Distribution Mode 83
Air Circulation Mode 84
3 Seats & Restraints 87
Seats 88
Overview 88
Head Restraints 89
Front Seats 90
Rear Seats 92
Front Seat Heating * 92

Seat Belts **94**
Protection Provided by Seat Belts 94
Wearing Seat Belts 96
Children and Seat Belts 100
Seat Belt Pre-tensioners 101
Seat Belt Checks, Maintenance and Replacement 102
Airbag Supplementary Restraint System **105**
Overview 105
Airbag Deployment 106
Conditions in Which Airbags Will Not Deploy 109
Service and Replacement of Airbags 110
Disposal of Airbags 111
Child Restraints **113**
Important Safety Instructions about Using Child Restraints 113
Child Restraints Groups 116
Approved Child Restraint Positions 118
4 Starting & Driving **123**
Keys **124**

Overview 124
Replacing the Battery 125
Advice about the Safe Disposal of Used Button/coin Batteries 126
Child Proof Locks 127
Alarm System 128
Power Immobilisation 128
Body Anti-theft System 128
Tailgate 132
Starting and Stopping the Power System 134
START STOP Switch 134
READY Mode 135
Switching the Power System OFF 137
Pedestrian Alert Control System 138
Economical and Environmental Driving 139
Running-in 139
Economic Driving 139
Driving in Special Environment 140
Check and Service 141
Charging and Discharging Requirements 142

Charging Your Vehicle at Home 144
Installed Charging Points 144
Home Charging Guide 144
Charging and Medical Condition Awareness 145
Charging Port 145
Electric Charging Identifier Label * 147
Rapid Charging 149
Slow Charging 150
Charging Information 153
Equalisation Charging 154
Charging Times 154
Discharging 158
Electric Drive Transmission 160
Instructions 160
Gear Shift Control 160
Driving on Hills 163
Driving Mode 163
Energy Regeneration 165
Energy Management 166
Protection Mode 167

Brake System **169**
Overview 169
Parking Brake System-Electronic Parking Brake (EPB) 170
Service Brake System 172
Adaptive Cruise Control System **182**
Adaptive Cruise Control System Activation 182
Adaptive Cruise Target Speed Adjustment 184
Adaptive Cruise Target Following Distance Adjustment 185
Adaptive Cruise Pause/Standby 186
Automatic Deactivation of Adaptive Cruise 186
Adaptive Cruise Override 186
Adaptive Cruise Resume 186
Clear Speed Memory 187
Adaptive Cruise Control System Impairment and Ineffectiveness 187
Special Driving Environments 187
Parking Aid System **191**
Ultrasonic Sensor Parking Aid 191
360 Around View System 193
Rear Driver Assistance System * **194**

System Overview 194
Switching the System Functions On/Off 196
System Functions 196
Tyre Pressure Monitoring System (TPMS) 200
Driving Assist System 202
Description of Front View Camera 202
Description of Front Detection Radar 203
Speed Assist System 204
Lane Assist System 209
Traffic Jam Assist System 212
Forward Collision System 215
Load Carrying 218
Loadspace Loading 218
Internal Loading 218
General Towing Safety 219
5 Emergency Information 221
Hazard Warning Devices 222
Warning Triangle 222

Emergency Starting **223**
Vehicle Recovery **225**
Towing for Recovery 225
Transporter or Trailer 228
Tyre Repair **230**
Tool Identification 231
Tyre Repair 231
Fuse Replacement **235**
Fuse 235
Fuse Box 235
Passenger Compartment Fuse Box 236
Front Compartment Fuse Box 239
Bulb Replacement **242**
Bulb Specification 242
Bulb Replacement 243
6 Maintenance **245**
Maintenance **246**
Routine Servicing 246

Bonnet **249**
Opening the Bonnet 249
Closing the Bonnet 249
Bonnet Open Warning 249
Front Compartment **251**
Cooling System **252**
Coolant Check and Top Up 252
Coolant Specification 252
Brake **254**
Brake Fluid Check and Top Up 254
Brake Fluid Specification 255
Battery **256**
Battery Maintenance 256
Battery Replacement 257
High Voltage Battery Pack **258**
Precautions and restricted conditions for use of battery 258
Washer **260**
Washer Fluid Check and Top Up 260

Washer Nozzles 261
Wipers 262
Wiper Blades 262
Replacing Front Wiper Blades 263
Replacing Rear Wiper Blades 264
Tyre 265
Overview 265
Caring for your Tyres 266
Tyre Wear Indicators 267
Tyre Rotation 268
Tyre/Snow Chains 270
Cleaning and Vehicle Care 271
Exterior 271
Cleaning the Interior 274
7 Technical Data 277
Technical Data Dimensions 278
Weights 279
Towing Weights 280

Parameters of Traction Motor **281**
Recommended Fluids and Capacities **282**
Wheel Alignment (Unladen Condition) **283**
Wheels and Tyres **283**
Tyre Pressure (Cold) **283**

Introduction

The Owner's Handbook

This handbook describes all of the vehicles and standard equipment specification within the model range. Some of the information therefore, may not apply to your particular car.

Always remember that if you have any queries concerning the operation or specification of your car, your MG Authorised Repairer will be glad to advise you.

The illustrations in the Owner's Handbook are for reference only.

The information presented in this manual may vary slightly depending on vehicle configuration, software version and sales area.

Status at Time of Printing

MG operates a policy of constant product improvement and therefore reserves the right to change specifications without notice at any time. Whilst every effort is made to ensure complete accuracy of the information in this publication, no liabilities for inaccuracies or the consequences thereof, including loss or damage to property, or injury to persons, can be accepted by the manufacturer or MG Authorised Repairer who supplied the publication, except in respect of personal injury caused by the negligence of the manufacturer or MG Authorised Repairer .

Symbols Used

The following symbols used within the handbook call your attention to specific types of information.

Warning

This warning symbol identifies procedures that must be followed precisely, or information that must be considered with great care, in order to reduce the risk of personal injury or serious damage to the car.

Important

IMPORTANT
The statements stated here must be followed strictly, otherwise your car could be damaged.

Note

Note: This describes helpful information.

This symbol indicates that parts described must be disposed of by authorised persons or bodies to protect the environment.

Asterisk

An asterisk (*) appearing within the text, identifies features or items of equipment that are either optional, or are only fitted to some vehicles in the model range.

Illustration Information

Identifies components being explained.

Identifies movement of components being explained.

Vehicle Identification Information

Vehicle Identification

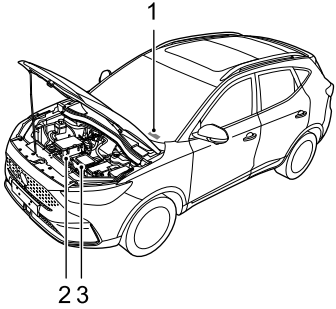

1 Vehicle Identification Number (VIN)

2 Drive Motor Number

3 Electric Drive System Number

Always quote the Vehicle Identification Number (VIN) when communicating with MG Authorised Repairer. If the drive motor or electric drive system is involved, it may be required to provide the identification numbers of these assemblies.

Vehicle Identification Location

Vehicle Identification Number (VIN)

- On the floor under the front driver seat;
- On the identification plate;
- Stamped on a plate visible through the bottom left hand corner of the windscreen;
- On the inner side of the tailgate visible by opening the tailgate.

Note: The DLC is located in the driver footwell at the base of the fascia panel on the RH side. The VIN information can be extracted from the vehicle using the approved diagnostic equipment.

Drive Motor Number

Stamped on the lower part of the drive motor housing.

Electric Drive System Number

Stamped behind the upper part of the electric drive system housing.

Vehicle Identification Label

The vehicle identification label contains the following information:

- Type Approval Number;
- Vehicle Identification Number (VIN);
- Gross Vehicle Weight;
- Gross Train Weight;
- Max Front Axle Weight;
- Max Rear Axle Weight;
- Paint Code;
- Trim Code;

Location of Vehicle Identification Label

The identification label is located at the lower side of right pillar B.

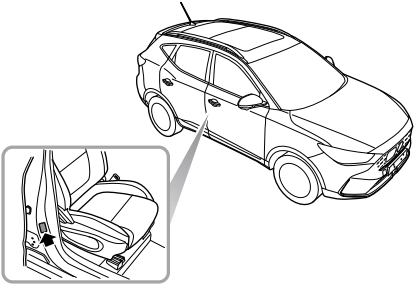

Instructions for Use of Electric Vehicle

Effects of Ambient Temperature

The working performance of the high-voltage battery pack fitted to your vehicle is related to the ambient temperature. This battery powers the vehicle power system and therefore it is recommended that where possible the vehicle should be used within the temperature range of -15 to 45°C. This will ensure that the vehicle is in the optimum working state, and help extend the service life of the high-voltage battery pack. Extremely high or low temperatures will affect the performance of the high-voltage battery pack and vehicle.

Instructions for High Voltage Battery Pack Recycling

The high-voltage battery pack fitted to your vehicle contains several lithium based battery cells. It is installed centrally to the motor-vehicle chassis. Arbitrary disposal may cause pollution, hazard and damage to the environment. The high-voltage battery pack MUST be recycled by an MG Authorised Repairer or a professional approved dismantling agent. Please refer to the following information and requirements.

- ONLY qualified personnel should work with the high voltage system - there is danger of DEATH.
- High voltage safety: the high voltage system fitted to your vehicle features a HV battery containing high voltage components such as lithium battery packs and high voltage wiring harness; DO NOT attempt to dismantle any area of this system, suitably trained professional staff must observe insulation safety protection before working on or near the high voltage system.
- Transportation: The high-voltage battery pack is classed as a Category 9 hazardous material and must be transported by vehicles qualified in transporting Category 9 hazardous materials.
- Storage: All HV components (including batteries) should be stored at room temperature and in a dry environment. They must be kept away from dangerous sources, such as flammable objects, heat and water sources.

- Internal composition: The high-voltage battery pack consists of lithium batteries (pack), PCB, HV and normal electric wiring, metal casing and other components.

It is strongly recommended that the used high-voltage battery pack generated from vehicle scrappage or any other reasons should be disposed of by an MG Authorised Repairer.

Note: If you decide not to use the recommended MG Authorised Repairer to dispose of your high voltage battery, the responsibility of the consequences of environmental pollution or accidents must be bourne by the owner.

Driving Range

The driving range of your vehicle depends on the HV battery condition, quantity of available electricity, vehicle age (current remaining battery life), weather, temperature, road conditions and driving habit etc.

The range can be affected by other electrical loads (such as A/C, lights etc), driving style and general road conditions.

It should be noted that:

- The driving range is related to the rate of discharge. In order to avoid a high rate of discharge from affecting the performance of the high-voltage battery pack, it is recommended that the vehicle is connected to a suitable charger upon illumination of the low battery warning lamp in the instrument pack.
- The actual driving range of the vehicle will reduce with the increase of vehicle age.
- The use of A/C will reduce the driving range.
- The driving range varies at different speeds.
- At low temperatures, the driving range will be reduced due to temperature characteristics of the battery during use.
- In some instances of extreme temperatures and low battery voltage, you may experience insufficient acceleration or power reduction. This is due to battery characteristics.

To help increase the range of the vehicle please observe the following:

- Have the vehicle regularly maintained as per service schedule.
- Always ensure the tyre pressures are correct.

- Try and use the vehicle between the recommended ambient temperatures.
- Do not park or store the vehicle for long periods with a low state of charge, where possible charge the vehicle as soon as possible prior to storage.
- Remove unnecessary articles to reduce the vehicle load.
- Use of high power consuming systems such as A/C and heating will use large amounts of power. This will reduce the driving range.
- At a high speed, where possible, close the windows to reduce wind resistance and power consumption.
- Try to maintain a steady speed at all times, avoid constant acceleration and braking.
- During acceleration, apply the accelerator pedal as gently as possible.
- During deceleration, release the accelerator pedal; under certain conditions when not applying the brake or gently applying the brake, the energy regeneration system (KERS) will assist in charging the HV battery and extend the driving range.

Equalisation Charging

In order to assist in extending the service life of the high voltage battery pack it is recommended that an equalisation charge is carried out at regular intervals.

Please see "Equalisation Charging" in the "Starting & Driving" section.

Intelligent Charging

The 12V battery SOC is constantly monitored, when the Start/Stop switch is in the OFF position it is possible, under certain conditions, that the HV battery will automatically charge the 12V battery to ensure the vehicle starts. This function will activate and switch off automatically.

Note: The system will suspend intelligent charging if a fault is present, when starting or the vehicle is being charged by an external device.

Note: The driving range will be reduced after intelligent charging.

Note: The intelligent charging function is suspended when the high voltage battery is in a low SOC.

Crash Outage Control

If a crash or serious impact occurs, a signal from the SDM (Airbag Control Module) will disconnect the relays within the battery management system isolating the high voltage battery from the systems on the vehicle.

High Voltage System

- ***The high voltage system used on your vehicle features AC and DC voltages up to about 438V. All high voltage components have warning labels attached - please observe these warnings and any requirements when operating within or close to these areas.***
- ***ONLY qualified personnel should work on, or with, the high voltage system - there is danger of DEATH.***

The high voltage system component layout is shown below:

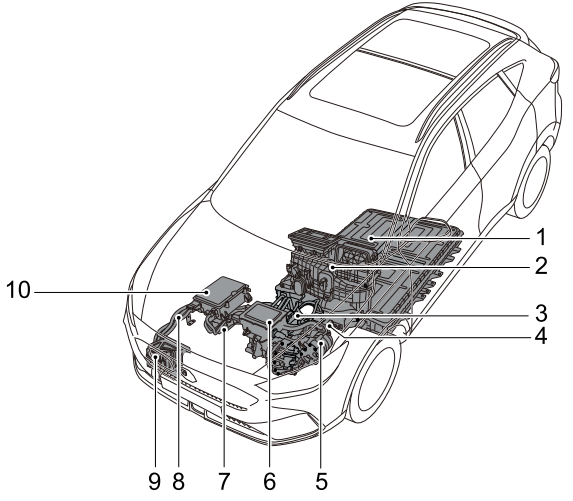

1 High Voltage Battery (ESS)
2 Electric Heater
3 Electric Drive Transmission
4 Manual Service Disconnect (MSD)
5 Electric A/C Compressor
6 Power Distribution Unit (PDU)
7 HV Battery Heater
8 High Voltage Harness
9 Charging Port
10 Combined Charging Unit (CCU)

Precautions in the Event of an Accident

- ***Ensure the vehicle is in P, the parking brake is applied and the vehicle power system is OFF.***
- ***If any cables on the vehicle are exposed, in order to prevent electric shock or even death DO NOT make any contact with any cable.***
- ***If the vehicle catches fire, and the fire is small and slow, a carbon dioxide extinguisher can be used to extinguish the fire, and contact the fire services as soon as possible; if the fire is large and spreading quickly, immediately evacuate the vehicle and contact the fire services immediately.***
- ***If the vehicle is involved in a collision and cannot be re-started, the negative cable of 12V battery and Manual Service Disconnect (MSD) MUST be disconnected prior to rescue.***
- ***When the vehicle is completely or partially immersed in water, switch off the vehicle power system and evacuate the car immediately. The negative cable of 12V battery and Manual Service Disconnect (MSD) MUST be disconnected prior to rescue or as soon as the vehicle is refloated/removed from the water. Observe the water/vehicle for any abnormal signs such as excessive bubbles or noises, this may indicate battery short circuit issues. If no signs are evident, there should not be a shock risk from the bodywork and recovery can commence.***
- ***If your car is being recovered by an independent recovery agent, please contact an MG Authorised Repairer for guidance.***
- ***The vehicle is supplied with an emergency response information card. Please show the card to the rescue personnel when they arrive.***

Button/coin Battery Safety

WARNING

- The car keys and tyre pressure sensors are powered by button/coin batteries.
- The battery is hazardous and is to be kept away from children (whether the battery is new or used).
- A lithium coin/button battery can cause severe or fatal injuries within 2 hours or less if it is swallowed or placed inside any part of the body.
- If you think batteries may have been swallowed or placed inside any part of the body, please seek medical rescue immediately.

14 Instrument Pack

16 Information Centre

25 Warning Lights and Indicators

36 Lights and Switches

44 Wipers and Washers

48 Steering System

50 Horn

51 Rearview Mirrors

54 Sunvisor

55 Windows

57 Sunroof *

63 Interior Light

64 Power Socket

67 Wireless Charging System for Mobile Phones *

69 Storage Devices

72 Cup Holder

73 Roof Luggage Rack *

Instrument Pack

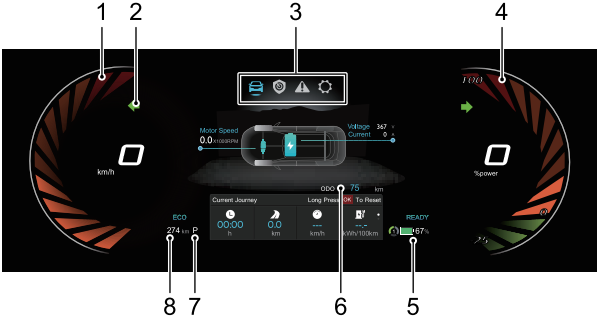

1 Speedometer

2 Warning Lamps and Indicators

3 Information Centre

4 Power Meter

Indicates the power status of the power drive system as a percentage. If the power is displayed as a positive value, it represents that the power system outputs power to drive the vehicle; If the power is displayed as a negative value, it represents that the power system converts part of the kinetic energy into electrical energy.

5 Electricity Meter of High-Voltage Battery Pack

IMPORTANT
• When the high voltage battery power indicator displays a low charge condition connect to a charger and charge immediately. • Before undertaking any journeys please ensure the high voltage battery contains enough power.

6 Total Mileage

7 Gear Display

8 Range To Empty

Note: Depending on the vehicle options, software version and market area, the information displayed may vary slightly.

Information Centre

With the vehicle power system in the ON/READY position, the information centre function can be selected as follows:

- Press the UP/DOWN/LEFT/RIGHT button in the RH steering wheel multifunction switch pack, this will access and display the information centre options.
- Press the UP/DOWN button in the RH steering wheel multifunction switch pack to cycle through options.
- Press the OK button in the RH steering wheel multifunction switch pack to confirm or long press the OK button to reset.

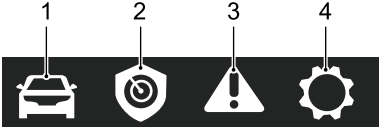

1 Vehicle Information

2 MG Pilot

3 Health Centre

4 Settings

Vehicle Information

Vehicle Information includes:

- Energy Flow: Displays a graphic showing the current state of power flow.
- Electrical Information: Displays the current operation state of the vehicle, including the voltage, current and motor speed.

- Current Journey: Displays the trip mileage, trip time, average speed and average power consumption since vehicle start. It can be reset by long pressing the "OK" button in the RH steering wheel multifunction switch pack.
- Accumulated Total: Displays the trip mileage, trip time, average speed and average power consumption since the last vehicle reset. It can be reset by long pressing the "OK" button in the RH steering wheel multifunction switch pack.

MG Pilot

Displays the active safety information of the vehicle.

Health Centre

- Tyre Pressure: displays the current status of each wheel.
- Battery Voltage: displays the 12V Battery Voltage.
- Warning Information : displays the warning information or important notes that are currently relevant to the vehicle.

Settings

Luminance Level

Displays the current level and allows adjustment of the backlight brightness.

OverSpeed Threshold

Allows the setting of the over-speed alarm threshold, please note, the over-speed alarm function is turned off when "OFF" is displayed.

Warning Message

Warning messages and prompts are displayed in the information centre in the instrument pack. Any communications are displayed in 'pop up' messages, these can be divided into the following categories:

- Operating Instruction
- System State Instruction
- System Malfunction Alert

Please follow the instructions displayed in the 'pop up' message or in the case of a warning message, please refer to the relevant section of the owners manual to follow the correct instructions.

The following are a selection of warning messages that may appear in the information centre.

Warning Message	Procedure
DANGER! Evacuate Vehicle Safely!	As soon as conditions permit, safely stop the vehicle and evacuate all occupants immediately, and contact an MG Authorised Repairer immediately.
Vehicle Control System Fault Please ask Serving Station for Help!	Indicates that the power system has detected a fault. Please contact an MG Authorised Repairer as soon as possible.
Vehicle Control System Fault Please drive carefully!	Indicates that the power system has detected a fault. Please drive carefully and contact an MG Authorised Repairer as soon as possible.

Warning Message	Procedure
Vehicle Control System Fault Please Stop Safely!	Indicates that the power system has detected a fault. As soon as conditions permit, safely stop the vehicle and switch the vehicle power system to the OFF position and contact an MG Authorised Repairer immediately.
MSA Fault	Indicates that the Manual Speed Assist (MSA) function has failed. Please contact an MG Authorised Repairer as soon as possible.
ISA Fault	Indicates that the Intelligent Speed Assist (ISA) function has failed. Please contact an MG Authorised Repairer as soon as possible.

Warning Message	Procedure
Lane Departure Warning System Fault	Indicates that the lane departure warning system (LDW) has detected a fault. Please contact an MG Authorised Repairer as soon as possible.
Emergency Lane Keeping System Fault	Indicates that the emergency lane keeping system (ELK) has detected a fault. Please contact an MG Authorised Repairer as soon as possible.
Forward Collision System Fault	Indicates that the forward collision warning system (FCW) has detected a fault. Please contact an MG Authorised Repairer as soon as possible.
Auto Emergency Braking System Fault	Indicates that the auto emergency braking system (AEB) has detected a fault. Please contact an MG Authorised Repairer as soon as possible.

Warning Message	Procedure
Pedestrian Auto Emergency Braking Fault	Indicates that the auto emergency braking system for pedestrians (AEBP) has detected a fault. Please contact an MG Authorised Repairer as soon as possible.
ACC System Fault	Indicates that the adaptive cruise control system (ACC) has detected a fault. Please contact an MG Authorised Repairer as soon as possible.
Traffic Jam Assist System Fault	Indicates that the traffic jam assist system (TJA) has detected a fault. Please contact an MG Authorised Repairer as soon as possible.
Rear Drive Assist System Fault	Indicates that the rear drive assist system (RDA) has detected a fault. Please contact an MG Authorised Repairer as soon as possible.

Warning Message	Procedure
Passive Entry Fault	Indicates that the passive keyless entry function has detected a fault. Please contact an MG Authorised Repairer as soon as possible.
Ignition System Fault	Indicates that the power mode has detected a fault. Please contact an MG Authorised Repairer immediately.
Start Stop Button Fault	Indicates that the START/STOP Switch has detected a fault. Please contact an MG Authorised Repairer immediately.
ABS Fault	Indicates that the anti-lock brake system (ABS) has detected a fault. and the ABS function is about to be disabled. Please contact an MG Authorised Repairer immediately.

Warning Message	Procedure
Brake Fault	Indicates that a fault has been detected within the braking system. Stop the vehicle as soon as safety permits, switch the vehicle power system OFF, and contact an MG Authorised Repairer immediately.
Stability Control Fault	Indicates that the SCS system has detected a fault. Please contact an MG Authorised Repairer immediately.
Traction Control Fault	Indicates that the TCS system has detected a fault. Please contact an MG Authorised Repairer immediately.
Parking System Fault	Indicates that the EPB system has detected a fault. Please contact an MG Authorised Repairer as soon as possible.

Warning Message	Procedure
Park Brake Force Not Enough	Indicates that the electronic parking brake system has detected a fault when parking. Please contact an MG Authorised Repairer as soon as possible.
Autohold Fault	Indicates that the auto hold function has detected a fault. Please contact an MG Authorised Repairer as soon as possible.
Hill Descent Control Fault	Indicates that the HDC system has detected a fault. Please contact an MG Authorised Repairer as soon as possible.

Warning Message	Procedure
EPS Performance Reduced	Indicates that the electric power steering system (EPS) has a general failure and the performance is reduced. As soon as conditions permit, safely stop the vehicle and switch the vehicle power system to the OFF position. After a short while, switch the vehicle power system to the READY position, drive the vehicle a short distance and monitor the operation of the steering. If the message is still displayed or the steering assistance reduced, please contact an MG Authorised Repairer immediately.

Warning Message	Procedure
EPS Assistance Failure	Indicates that the electric power steering system (EPS) has detected a fault. Please contact an MG Authorised Repairer immediately.
Steering Angle Fault	Indicates that the steering angle sensor has failed. Please contact an MG Authorised Repairer as soon as possible.
Steering Angle Uncalibrated	Indicates that the steering angle sensor is not calibrated. Please contact an MG Authorised Repairer as soon as possible.
ESCL Fault	Indicates that the ESCL has detected a fault. As soon as conditions permit, safely stop the vehicle and switch the vehicle power system to the OFF position and contact an MG Authorised Repairer immediately.

Warning Message	Procedure
Airbag Fault	Indicates that the SDM has detected a fault. As soon as conditions permit, safely stop the vehicle and switch the vehicle power system to the OFF position and contact an MG Authorised Repairer immediately.
TPMS Fault	Indicates that the tyre pressure monitoring system (TPMS) has detected a fault. Please contact an MG Authorised Repairer as soon as possible.
Front Left/Front Right/Rear Left/Rear Right Tyre Sensor Battery Low	Indicates that the TPMS has detected a sensor has a low battery. Please contact an MG Authorised Repairer as soon as possible.

Warning Message	Procedure
12V Battery Charging System Fault	Indicates that the 12V battery charging system has detected a fault. Please contact an MG Authorised Repairer immediately.
DCDC Charge Fault	Indicates that the CCU has detected a fault. Please contact an MG Authorised Repairer immediately.
Front Camera System Fault	Indicates that the front view camera module (FVCM) has detected a fault. Please contact an MG Authorised Repairer as soon as possible.
Front Camera Calibration Failed	Indicates that the front view camera module (FVCM) calibration has failed. Please contact an MG Authorised Repairer as soon as possible.

Warning Message	Procedure
RADAR Calibration Failed	Indicates that the radar module calibration has failed. Please contact an MG Authorised Repairer as soon as possible.
Vacuum System Fault	Indicates that the vacuum system has detected a fault. As soon as conditions permit, safely stop the vehicle and switch the vehicle power system to the OFF position and contact an MG Authorised Repairer immediately.

Warning Message	Procedure
Motor Overheating	Indicates that the motor has overheated. Please contact an MG Authorised Repairer as soon as possible.
Motor Fault	Indicates that the drive motor has detected a fault. As soon as conditions permit, safely stop the vehicle and switch the vehicle power system to the OFF position and contact an MG Authorised Repairer immediately.

Warning Lights and Indicators

If any warning light or indicator appears in the instrument during the process of vehicle starting or driving, it means that the relevant system is in a certain state or has a fault. Some warning lights will illuminate or flash accompanied with warning tone or prompt message.

Please read the following instructions in detail for the meaning of the relevant warning lights and indicators. In case of failure, please take corresponding measures in time and contact an MG Authorised Repairer as soon as possible.

Name	Icon	Description
Main Beam Indicator		The headlamp high beam is turned on.
Auto Main Beam Indicator		The auto main beam function is enabled.
Side Lamp Indicator		The side lamps are on.
Rear Fog Lamp Indicator		The rear fog lamps are on.

Direction Indicators		When the turning signal lamp flashes, the direction indicator lamp on the corresponding side also flashes. If the hazard warning lamps are operated, both direction indicator lamps will flash together. If either direction indicator lamp in the instrument pack flashes very rapidly, it indicates that the turning signal light on the corresponding side has failed.
Airbag Warning		It indicates that the SRS or the seat belt has failed. As soon as conditions permit, safely stop the vehicle and switch the vehicle power system to the OFF position and contact an MG Authorised Repairer immediately. An SRS or seat belt fault may mean the components may not be deployed in the event of an accident.
Seat Belt Unfastened Warning		If this lamp illuminates or flashes, it indicates that the seat belt for the driver or passenger remains unfastened.
Immobiliser System Warning		If no valid key is detected, this lamp will illuminate. Please use the correct key, or put the smart key at the alternative starting position. For specific location requirements, refer to "Alternative Starting Procedure" in "Starting & Driving" section. If the remote key battery is low, this lamp flashes. Please replace the battery as soon as possible.

Tyre Pressure Monitoring System (TPMS) Warning		If this warning lamp illuminates, it indicates that a tyre pressure is low. Please check the tyre pressures. If this lamp flashes first and then remains illuminated after a period of time, it indicates the system has detected a fault.
Electric Power Steering (EPS)/Electronic Steering Column Lock (ESCL) Warning		If this lamp illuminates, it indicates that the electric power steering system has a general failure and the performance is reduced. Please stop the vehicle as soon as safety permits. If the lamp still illuminates after restarting the vehicle and driving for a short while, please contact a local MG Authorised Repairer for service immediately. If this lamp flashes, it indicates the electric steering column lock has a failure. Please stop the vehicle as soon as safety permits, and turn off the START/STOP Switch. If this lamp extinguishes after flashing for a while, it indicates that the steering wheel is locked. Please attempt to release the lock by rocking the steering wheel left to right.
		If this lamp illuminates, it indicates the electric power steering system has a general failure relevant to steering angle. If this lamp flashes, it indicates the electric power steering system has a severe failure and it is hard to steer. Please stop the vehicle as soon as safety permits.

Stability Control/Traction Control System Warning Lamp		If this lamp illuminates, it indicates that the stability control system or traction control system has failed. If this lamp flashes while driving, it indicates that the system is operating to assist the driver.
Stability Control/Traction Control System OFF Warning	OFF	The stability control / traction control system is switched off manually.
Hill Descent Control (HDC) On/Malfunction Indicator		If this lamp illuminates, it indicates that the HDC system is in the standby state. If this lamp flashes, it indicates that the vehicle is under the control of HDC.
		The HDC system has detected a fault.
Auto Hold Status Indicator	P	The auto hold system is operating to assist the driver.

Electronic Parking Brake (EPB) Status Indicator		If this lamp illuminates, it indicates that the EPB is enabled. If this lamp flashes, it indicates that the vehicle is parked on an excessive slope or the EPB system has failed. Please securely park the vehicle on a safe road.
Electronic Parking Brake (EPB) System Malfunction Warning		The EPB system has detected a fault.
Brake System Malfunction Warning		The brake system has failed. Please stop the vehicle as soon as safety permits, and turn off the START/STOP Switch.
ABS Malfunction Warning		The ABS has failed. If an ABS failure occurs while driving, ABS operation will be suspended, but normal braking will still be available.
System Fault Message Indicator		This indicator is used to inform the driver that the vehicle has a stored warning message. Please view the fault message or important notes in the information centre. Refer to "Information Centre" in this chapter.

Low-voltage Battery Charging System Malfunction Warning		If this lamp illuminates after starting the vehicle, it indicates that the low-voltage battery charging system has failed. If this lamp flashes, it indicates that the battery power is low, and a prompt message appears in the instrument pack. At this time, the system will restrict or turn off some electrical devices. Please start the vehicle immediately to charge the battery.
High-voltage Battery Pack Low Battery Warning		If this lamp illuminates or flashes, it indicates that the high voltage battery charge is low. Where possible please charge the high voltage battery before this lamp enters the flashing stage.
High-voltage Battery Pack Cutoff Warning		The high voltage battery is disconnected or isolated.
High-voltage Battery Pack Malfunction Warning		If this lamp illuminates, it indicates that the high voltage battery has detected a fault. If this lamp flashes, it indicates that the high voltage battery temperature is too high. Please stop the vehicle as soon as safety permits and leave the vehicle immediately.
Charging Connection Indicator		The vehicle is connected to a charge point.

Charging Status Indicator		When the vehicle is connected to an external power supply for charging, this lamp will illuminate and extinguish after charging is completed.
Driving Power Limited Warning		The vehicle power has been reduced.
Power System Malfunction Warning		The vehicle has a fault and its performance is limited.
		The vehicle has a serious fault. Please stop the vehicle as soon as safety permits, and turn off the START/STOP Switch.
READY Indicator	READY	The vehicle is ready for driving.
Driving Mode Indicator	NORMAL	Displays the current driving mode of the vehicle: NORMAL、SPORT、ECO.
Braking Energy Recovery Level Indicator	1	Displays the current braking energy recovery level of the vehicle.

Manual Speed Assist System Indicator		The Manual Speed Assist System is activated.
		If this lamp illuminates, it indicates that the Manual Speed Assist System is in the standby state. If the Manual Speed Assist System has a fault, the lamp will flash yellow and then extinguish.
Intelligent Speed Assist System Indicator		The Intelligent Speed Assist System is activated.
		If this lamp illuminates, it indicates that the Intelligent Speed Assist System is in the standby state. If the Intelligent Speed Assist System has a fault, the lamp will flash yellow and then extinguish.
Manual Speed Assist System Speed Indicator		This lamp will illuminate when the Manual Speed Assist System is enabled. 'NNN' denotes the current setting value of the speed limit.
Speed Limit Sign Indicator		'NNN' denotes the speed value of speed limit sign currently recognised.

Speed Limit Sign Additional Information Warning		The speed limit sign currently recognised has additional information. Please pay attention to it.
Adaptive Cruise Control System Indicator		The Adaptive Cruise Control System is activated.
		The Adaptive Cruise Control System is in the standby state.
		The Adaptive Cruise Control System has a fault.
Traffic Jam Assist System Indicator		The Traffic Jam Assist System is activated.
		If this lamp illuminates, it indicates that the Traffic Jam Assist system is in the standby state. If this lamp remains illuminating after flashing for a while, it indicates that the system cannot work normally.

Lane Assist System Indicator		The lane departure warning function is on and meets the activation conditions.
		If this lamp illuminates, it indicates that the lane departure warning function is in the standby state. If this lamp remains illuminating after flashing for a while, it indicates that the system cannot work normally.
		The lane keep assist function is on and meets the activation conditions.
		If this lamp illuminates, it indicates that the lane keep assist function is in the standby state. If this lamp remains illuminating after flashing for a while, it indicates that the system cannot work normally.

Forward Collision System Indicator		If this lamp illuminates, it indicates that any function of the Forward Collision System is off. If this indicator illuminates when all the functions is enabled, it indicates that the Forward Collision System cannot operate normally.
Rear Driving Assist System Indicator *		The Rear Driving Assist System is turned off, the radar is covered or the system has failed, the corresponding prompt message will appear in the instrument pack.

Note: There are some circumstances where a warning light may illuminate or a warning message is displayed as an indication of an issue with the associated system, this does not necessarily indicate a fault. If in doubt, please seek advice from an MG Authorised Repairer.

Lights and Switches

Master Lighting Switch

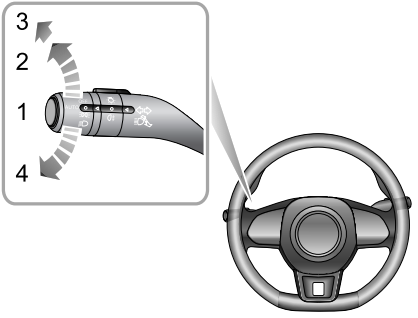

1 AUTO Lamp

2 Side Lamps and Switch Illumination

3 Dipped Headlamps

4 Lights OFF

AUTO Lamp

When the vehicle power system is in the ACC position, the auto lighting system defaults to the ON position (1). The auto lighting system will automatically switch the side lamps and switch illumination on and off according to the intensity of current ambient light.

With the vehicle power system switched to the ON/READY position, the auto lighting system defaults to the ON position (1). The auto lighting system will automatically switch the side lamps, switch illumination and dipped headlamps on and off according to the intensity of current ambient light.

Note: This function is realized by fitting a sensor capable of monitoring exterior lighting conditions in real time on your vehicle. The sensor is fitted in the centre of the fascia panel near the windscreen in some models. DO NOT mask or cover this area, or the headlamps may automatically come on when not necessary.

Side Lamps and Switch Illumination

When the START/STOP Switch is in the ACC position, turn the master lighting switch to position 2 to operate the side lamps and switch illumination.

When the START/STOP Switch is in the ON/READY position, turn the master lighting switch to position 2 to operate the daytime running lamps, rear side lamps and switch illumination.

With the START/STOP Switch in the OFF position if the lighting switch is in position 2 and the driver's door is opened an audible warning will sound to alert the driver, the side lamps will remain on.

Dipped Headlamps

When the START/STOP Switch is in the ON/READY position, turn the master lighting switch to position 3 to operate the dipped headlamps, side lamps and switch illumination.

Lights Off

Turn the master lighting switch to position 4, this will switch off all lamps, releasing the switch will allow it to return to the AUTO switch position.

Daytime Running Lamp

The daytime running lamps turn on automatically when the START/STOP Switch is in the ON/READY position. When the dipped headlamps are switched on, the daytime running lamps extinguish automatically.

Follow Me Home

After the START/STOP Switch is turned off, pull the lighting stalk switch towards the steering wheel. This will enable the Follow Me Home function, dipped beam headlamps and side lamps will illuminate depending upon the vehicle configuration. It can be set on the entertainment display.

Headlamp Levelling Manual Adjustment

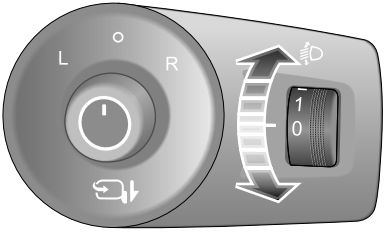

Position 0 is the initial position of the headlamp levelling adjustment switch. The headlamp levelling adjustment can be made as per the following table according to the vehicle load.

Location	Load
0	Driver, or driver & front passenger.
1	All the seats occupied with no load.
2	All the seats occupied plus an evenly distributed load in the boot, or driver with full load.
3	Driver only, plus an evenly distributed load in the boot.

Main Beam Switch

Take care not to dazzle oncoming vehicles when driving using main beam headlamps.

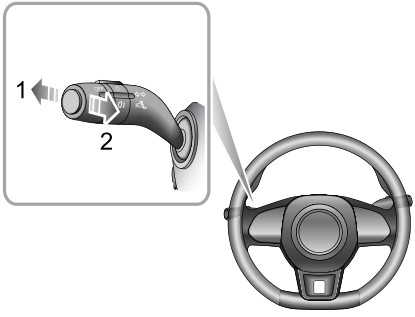

Headlamp High/Low Beam Switching

With the START/STOP Switch in the ON/READY position and dipped headlamps are switched on, push the lever (1) towards the instrument panel to turn on headlamp high beams. The high beam indicator lamp in instrument pack illuminates, push the lever (1) again or pull the lever (2) to switch to headlamp low beams.

High Beam Flash

To briefly flash the high beam on and off, pull the lever towards the steering wheel (2) and then release.

Auto High Beam

The auto high beam system serves only as an auxiliary function. The driver must check the status of the front lamps, and turn on the front lamps when necessary.

For example: The main beam may not be turned off automatically in the following cases, thus manual switching between the main beam and dipped beam is required:

- ***The windscreen is dirty, broken or obstructed by other objects blocking the view of the sensor.***
- ***The lamps of other vehicles are missing, damaged, blocked or cannot be detected due to weather and other reasons.***
- ***When pedestrians, non-motor vehicles and other objects with no obvious light or reflected light are encountered.***
- ***When the headlamps and tail lamps of other vehicles cannot be detected due to the sensor view being impaired due undulating road conditions such as bends, dips or hills.***
- ***When the car is driving on a winding road or mountainous road.***

The auto high beam system is designed to detect the light intensity information of the vehicle in front using the vehicle forward camera and switch the main beam on or off when certain conditions are met. When the auto high beam system is enabled, the auto high beam indicator in the instrument pack illuminates. After the vehicle is started, the auto high beam system enters the ready state of work. It can be set on the entertainment display.

In the case of automatic control, the system will automatically turn on the main beam when the surrounding environment is dark and there is no light detected from any vehicles ahead, or oncoming vehicles; when the surrounding environment is bright enough or the system detects the headlamps or tail lamps of the vehicle ahead or oncoming vehicles, the system will automatically turn off the main beam.

To enable the auto high beam system, the following conditions must be met:

1 The master lighting switch must be in the Auto position and the dipped beam lamps switched on via automatic control.

2 The vehicle is running and the speed is above 25mph (40km/h).

If the following conditions are met, the vehicle will automatically exit the auto high beam system.

- When the auto high beam system is enabled and the dipped beam lights are automatically turned on, the high beam switch is operated.
- When the auto high beam system is enabled and the main beam lights are automatically turned on, the high beam switch is operated.
- When the auto high beam system is enabled and the main beam lights are automatically turned on, the high beam flash switch is operated.

If the system exits, quickly push the direction indicator/main beam switch (main beam 'ON') towards the instrument pack twice to enter the auto high beam system again. You can only exit two times in one ignition cycle. If you exit greater than or equal to three times, you will not be able to enable this function again in the current start cycle. The auto high beam system can be reactivated after the next start cycle.

IMPORTANT
The auto high beam function uses data from the front view camera, always keep the windscreen clean and free from residue in this area to maintain optimum performance of this system. Any damage in this area, such as stonechips must be repaired at the earliest convenience.

Direction Indicator Switch

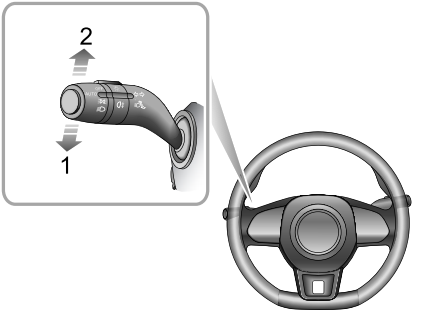

Move the lever down to indicate a LEFT turn (1). Move the lever up to indicate a RIGHT turn (2). The corresponding GREEN indicator lamp in the instrument pack will flash when the turning signal lamps are working.

Rotating the steering wheel will cancel the indicator operation (small movements of the steering wheel may not operate the self cancelling). To indicate a lane change, move the lever briefly and release, the indicators will flash three times and then cancel.

Fog Lamp Switch

Fog lights should only be used when visibility is below 100m - other road users could be dazzled in clear conditions.

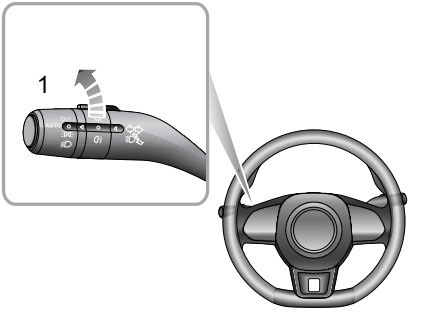

Rear Fog Lamp

With the START/STOP Switch in the ON/READY position and the headlamps on, turn the fog lamp switch to position 1, this will turn on the rear fog lamp, release the switch to allow it to return to the last position. The indicator

illuminates in the instrument panel when the rear fog lamp is on.

Hazard Warning Lamp

Press the hazard warning lamp button ⚠ to turn on the hazard warning lamps. The turning signal lamps and direction indicator lamps will flash together. Press the button again to switch off the hazard warning lamps. All turning signal lamps and direction indicator lamps will stop flashing.

Wipers and Washers

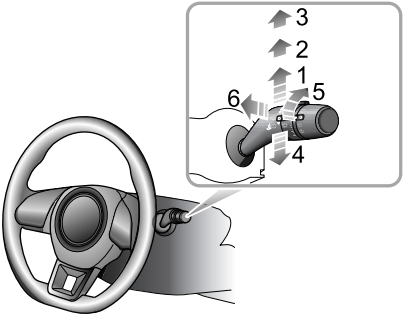

Windscreen Wiper Operation

The wipers and washers will only operate with the vehicle power system in the ACC/ON/READY position. Operate the lever to select different wipe speeds:

- Intermittent wipe (1)
- Slow wipe (2)
- Fast wipe (3)
- Single wipe (4)
- Automatic wipe interval adjustment * / Rain sensor sensitivity adjustment *(5)
- Programmed wash/wipe (6)

Intermittent Wipe

By pushing the lever up to the Intermittent wipe position (1), the wipers will operate automatically. Turn the switch (5) * to adjust the intermittent wipe frequency. This speed will also change with the vehicle speed. As the vehicle speed increases, the wiper frequency increases. As the vehicle speed decreases, the wiper frequency decreases.

Some models are equipped with a rain sensor fitted to the interior rear view mirror base to detect varying amounts of water on the outside of the windscreen. With automatic wipe, the vehicle will adjust the wiping speed according to the signals provided by rain sensor. Turn the switch (5) * to adjust the sensitivity of rain sensor. As the sensitivity increases, the wiping interval decreases.

Note: Immediately operating the wiper one time can be achieved by increasing the sensitivity of rain sensor. If the rain sensor detects continuous rainwater, the

wiper will keep working. When no rain is detected, it is recommended to switch off automatic wipe.

Slow Wipe

By pushing the lever up to the slow wipe position (2), the wipers will operate slowly. Move the lever to re-select the wipe speed.

Fast Wipe

By pushing the lever up to the fast wipe position (3), the wipers will operate fast. Move the lever to re-select the wipe speed.

Single Wipe

Pressing the lever (4) down and releasing will operate a single wipe, if the lever is held down, the wipers will operate continuously until the lever is released.

Note: When the car is stationary, if the bonnet is opened, the front wiper/washer will stop work immediately.

IMPORTANT

- Avoid operating the wipers on a dry windscreen.
- In freezing or extremely hot weather conditions, make sure that the wiper blades are not frozen/adhered to the windscreen.
- In winter, remove snow or ice from around the arms and blades, including the wiped area of the screen.

Programmed Wash/Wipe

Pulling the lever toward the steering wheel (6) will operate the windscreen washers. After a short delay, the wipers will commence operating in conjunction with the washers.

Note: The wipers continue operating for a further three wipes after the lever is released. After several seconds, there will be a further wipe to remove any fluid draining down the screen.

IMPORTANT
If the washers fail to deliver the screen wash solution (dirt or ice may have blocked the jets), release the lever immediately. This will prevent the wipers from operating, and the consequent risk of visibility being impaired by dirt smearing across the unwashed windscreen.

Rear Window Wiper Operation

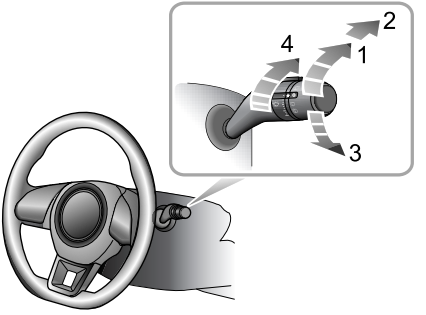

The rear window wiper and washer will only operate with the vehicle power system in the ACC/ON/READY position. Operate the lever to select different wipe speeds:

- Intermittent wipe (1)
- Wash and wipe (2)
- Wash and wipe (3)
- Intermittent wipe frequency adjustment (4)

Intermittent Wipe

Turn the rear window wiper switch to intermittent wipe (1), the rear window wiper will operate, after 3 consecutive wipes, the wipers will enter into intermittent mode. The time period between the wipes can be increased/decreased via the intermittent wipe frequency adjustment switch (4).

Wash and Wipe

Turn the rear window wiper switch to wash and wipe (2) position and hold, the rear window wiper and washer will operate, the rear window wiper wipes quickly. release the switch allowing it to return to intermittent wipe (1), the rear window washer will stop operating.

Turn the rear window wiper switch to wash and wipe (3) and hold, the rear window wiper and washer will operate. release the switch allowing it to return to OFF position, the rear window washer will stop operating, and the rear window wiper wipes for 3 times, after several seconds, the wiper will wipe once more to remove the washer fluid on the windscreen.

Note: When the tailgate is opened, rear window wiper operations will be disabled.

Note: When the windscreen wipers are switched on, if the shift control knob is moved to, or in the R position, the rear window wiper will operate.

Steering System

Adjustment of Steering Column

DO NOT attempt to adjust the angle of the steering column while the vehicle is in motion. This is extremely dangerous.

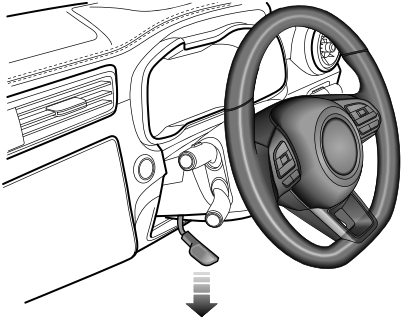

To adjust the angle of the steering column to suit your driving position:

1 Fully release the locking lever.

2 Hold the steering wheel in both hands and tilt the steering column up or down to move the wheel into the most comfortable position.

3 Once a comfortable driving position has been selected, pull the locking lever fully up to lock the steering column into its new position.

Electric Power Steering

If the electric power steering fails or cannot operate the steering will appear very heavy, this will affect driving safety.

The electric power steering system only works when the vehicle is in READY mode. The system operates via a motor with assistance levels automatically adjusted based on vehicle speed, steering wheel torque and steering wheel angle.

IMPORTANT
Holding the steering wheel on full lock for long periods will result in a reduction in power assistance causing a heavier feel to the steering for a short period of time.

Horn

Press the horn button area on the steering wheel (as indicated by the arrow) to operate the horn.

Note: The vehicle horn switch location and the driver's airbag are located in close proximity on the steering wheel. The illustration shows the position of the horn switches, please ensure that you press in this area to avoid any potential conflict with the operation of the airbag.

IMPORTANT
To avoid possible SRS issues, please do not press with excessive force or hit the airbag cover when operating the horn.

Rearview Mirrors

The vehicle is fitted with rear view mirrors, these consist of a door mirror fitted to each door and a centrally mounted interior mirror. Rear view mirrors reflect situations directly behind or on both sides of the vehicle thus expanding the driver's field of vision.

The rearview mirrors are safety-critical parts. Proper use and reasonable mirror angle adjustment can improve the driver's driving safety and comfort.

Exterior Door Mirrors

Note: Objects viewed in exterior door mirrors may appear further away than they actually are.

The mirrors can be electrically or manually folded back towards the side windows into a 'park' position to enable the car to negotiate narrow openings and avoid collisions.

In addition to the folding function, the mirror angle of the exterior door mirrors can be adjusted electronically, and has the mirror heating function.

Mirror Glass Heating

The door mirrors have integral heating elements which disperse ice or mist from the glass. The heating elements operate while the Heated Rear Window is switched on.

Note: The heating elements of rear window and mirror will only work when the power system is in READY mode.

Electric Door Mirror Glass Adjustment

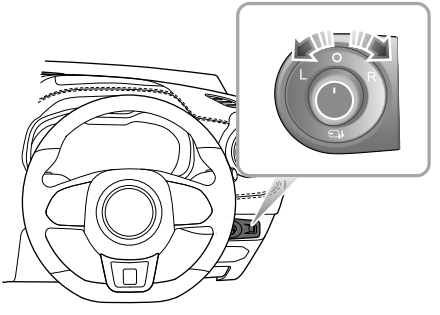

- The mirror adjustment function will work with the START/STOP Switch in all modes, including OFF, ACC and ON/READY.
- Rotate the knob to select left (L) or right (R) rearview mirror.
- Move the knob in the desired direction to adjust the angle of the exterior mirror glass.
- Upon completion of the adjustment, rotate the knob back to the central position, this will ensure no accidental adjustment of the mirror.

Manual Folding of Door Mirror *

For vehicles not fitted with the electric door mirror fold option, the exterior mirrors can only be folded backwards manually.

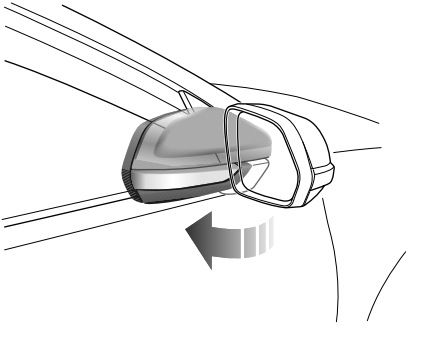

Electric Folding of Door Mirror *

For vehicles fitted with electric door mirror folding, rotate the knob to the middle position, and push the knob down. The door mirrors will be folded automatically. Pushing the knob downwards again will return the mirrors to their original position.

Operating the key fob lock/unlock buttons will fold/unfold the door mirrors.

Note: Electrical folding door mirrors that have been moved from their positions by manual or accidental means must be reset by operating the knob to complete fold and deployment one time.

IMPORTANT
• Door mirror glass adjustments and door mirror folding are operated by electrical motors. Operating them directly by hand may damage the internal components. • Washing or flushing door mirrors with high pressure water jets or car washes may result in electrical motor failure.

Manual Anti-dazzle Interior Rearview Mirror

Adjust the body of the interior rearview mirror to achieve the best possible view. The anti-dazzle function of the interior rearview mirror helps to reduce glare from the headlamps of following vehicles at night.

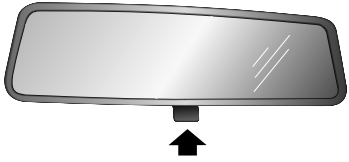

Move the lever at the base of the mirror forward to 'dip' the mirror and achieve the anti-dazzle function. Normal visibility is restored by pulling the lever back again.

Note: In some circumstances, the view reflected in a 'dipped' manual mirror can confuse the driver as to the precise location of following vehicles.

Sunvisor

The vanity mirror on the driver side should only be used when the car is stationary.

Sunvisors (1) are arranged on the roof ahead of both the driver and the front passenger. Some models have vanity mirror (2) , depending on the vehicle configuration. For the models which have vanity mirror, pull the sunvisor downward and slide the cover aside to use the vanity mirror.

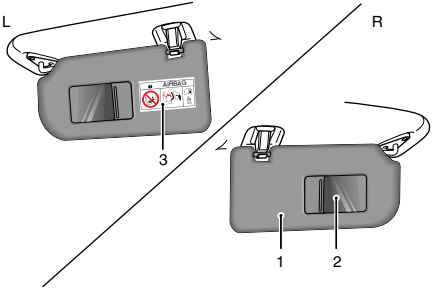

Note: Warnings and instructions on use of child restraint (3) are attached to both sides of the passenger sunvisor.
NEVER use a rearward facing child restraints on a seat protected by an ACTIVE AIRBAG in front of it, DEATH or SERIOUS INJURY to the CHILD can occur. Refer to 'Disabling the Passenger Airbag'.

Windows

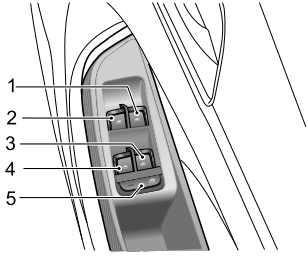

1 Front Right Window Switch

2 Front Left Window Switch

3 Rear Right Window Switch

4 Rear Left Window Switch

5 Rear Window Isolation Switch

Window Operation

Ensure children are kept clear when raising or lowering a window.

Improper use or activation of the electric windows by children could cause serious harm or even death. It is the responsibility of the driver and adult passengers to ensure that when carrying children the necessary steps are taken to isolate the window operation. This should include the removal of the key when children are left alone in the vehicle.

Push the switch (1-4) down to lower, and pull the switch up to raise the window. The window will stop moving as soon as the switch is released (unless the 'One-Touch' function is active).

Note: The front and rear passenger windows can also be operated by individual window switches, mounted on each door. The rear window switches will not operate if the rear window isolation switch has been activated.

Note: The electric windows can be operated with the vehicle power system in the ACC, ON and READY positions. (For safety: doors should be closed).

Rear Window Isolation Switch

Press the button (5) to isolate the rear window controls, press again to restore control.

Note: It is recommended that you ISOLATE the rear window switches when carrying a child.

"One-Touch" Down

The driver's window control switch (1) has 2 positions. Short press the window control switch to the "2" position and release. The window automatically descends to fully open. Window movement can be stopped at desired position at any time by operating the corresponding switch during descent.

"One-Touch" Up with "Anti-Trap"

The driver's window control switch (1) has the "one-touch" up function. Lifting the switch to the "2" position for a short time and releasing will automatically close the window completely. Window movement can be stopped at a desired position at any time by briefly operating the switch again.

The "Anti-Trap" function is a safety feature which prevents the window from fully closing if an obstruction is sensed - if this happens the window will open slightly to allow the obstruction to be removed.

Note: DO NOT operate the power window controls continuously several times in a short time frame, otherwise the power window controls may be disabled to protect the motor. If this occurs, please wait a few seconds until the motor cools down. In the case of the driver's window with "One Touch and Anti-Trap" please wait 30 seconds prior to operation. In some cases it may take 30 minutes to completely cool down, during which time the negative battery lead should not be disconnected.

Note: If the battery is disconnected, the "One-Touch" and "Anti-Trap" features will be lost. To restore this feature, fully close the window and hold the switch for 5 seconds, and then fully open the window and press the switch for 5 seconds.

Sunroof *

The sunroof consists two pieces of glass and one sunshade. The front glass can be opened by sliding or tilting, the rear one is fixed and cannot be opened, and the sunshade can slide open.

Instructions

DO NOT allow passengers to lean out of an open sunroof whilst the vehicle is in motion. Injuries may occur from objects such as tree branches.

Safety of the vehicle occupants must be observed at all times. DO NOT allow limbs to be placed in the moving path of the sunroof at any time, injury may occur.

- Avoid fully opening the sunroof during rain showers.
- It is advised not to open the sunroof at high speeds.
- Where possible, please clean any residual water or raindrops off the sunroof prior to opening. Failure to do so may result in water entering the car.
- DO NOT use abrasive materials to clean the sunroof glass. Use alcohol based solvent.
- DO NOT hold the operating switch in the open/close position for any length of time after operation is complete, this could damage the electrical components.
- Clean the sunroof regularly to maintain operation and performance. Visit an MG Authorised Repairer for service as required.

Sunroof Operation

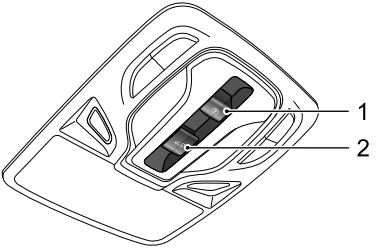

When the START/STOP Switch is set to ACC or ON/READY, you can operate the sunroof.

Switch 1 is used to operate the sunroof sunshade, and switch 2 is used to operate the sunroof glass. The operational function is identified by the icons on the switches.

Sunroof Glass Operation

Open the Sunroof Glass by Tilting

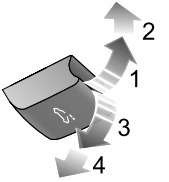

Push the sunroof glass switch upward to the 1st position (1) and hold, the sunroof will tilt open manually. You can stop the movement of the sunroof at any time by releasing the switch.

Push the glass switch with slightly harder force to move the switch to its 2nd position (2) and then release, the sunroof will automatically open completely.

Close the Sunroof Glass by Tilting

Pull the sunroof glass switch downward to the 1st position (3) and hold, the sunroof will close manually. You can stop the movement of the sunroof at any time by releasing the switch.

Pull the glass switch with slightly harder force to move the switch to its 2nd position (4) and then release, the sunroof will automatically close completely.

Open the Sunroof Glass by Sliding

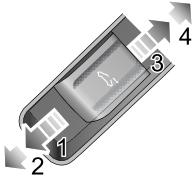

Push the sunroof glass switch backward to the 1st position (3) and hold, the sunroof will slide open manually. You can stop the movement of the sunroof at any time by releasing the switch.

Push the glass switch backward with slightly harder force to move the switch to its 2nd position (4) and then release, the sunroof will automatically open fully. You can stop the movement of the sunroof at any time by pushing the switch backward again.

Close the Sunroof Glass by Sliding

Push the sunroof glass switch forward to the 1st position (1) and hold, the sunroof will close manually. You can stop the movement of the sunroof at any time by releasing the switch.

Push the glass switch forward with slightly harder force to move the switch to its 2nd position (2) and then release, the sunroof will automatically fully close. You can stop the movement of the sunroof at any time by pushing the switch forward again.

Note: Due to the design of the sunroof there may be occasions where using the manual close function provides a visual impression that the glass is fully closed, this may not be the case, it is recommended to use the 2nd position to automatically close the sunroof glass when it needs to be completely closed

Sunroof Sunshade Operation

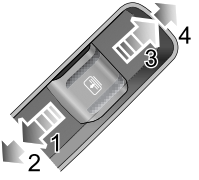

Open the Sunshade

Push the sunroof sunshade switch backward to the 1st position (3) and hold, the sunshade will slide open manually. You can stop the movement of the sunshade at any time by releasing the switch.

Push the sunshade switch backward with slightly harder force to move the switch to its 2nd position (4) and then release, the sunshade will automatically open fully. You can stop the movement of the sunshade at any time by pushing the switch backward again.

Close the Sunshade

Push the sunroof sunshade switch forward to the 1st position (1) and hold, the sunshade will close manually. You can stop the movement of the sunshade at any time by releasing the switch.

Push the sunshade switch forward with slightly harder force to move the switch to its 2nd position (2) and then release, the sunshade will automatically fully close. You can stop the movement of the sunshade at any time by pushing the switch forward again.

Note: If the vehicle is to be parked in direct sunlight for a length of time it is recommended that the sunshade be closed to protect the interior trim components from damage, and to help regulate the in car temperatures.

Anti-pinch Function

The sunroof and sunshade feature an “Anti-Pinch” function, this is a safety feature which prevents the sunroof or sunshade from fully closing whilst in the automatic mode if an obstruction is sensed - if this happens the sunroof/sunshade will open slightly to allow the obstruction to be removed.

Forcibly Closing the Sunroof (over-riding the anti pinch)

To forcibly close the sunroof glass after an anti-pinch intervention, gently slide the glass switch forwards to the 1st position and hold in position until the sunroof glass is fully closed.

Note: The anti pinch function is suspended during this operation.

Forcibly Closing the Sunshade (over-riding the anti pinch)

To forcibly close the sunshade that has reopened due to activation of anti-pinch function: gently slide the sunshade switch forwards to the 1st position and hold it until the sunshade closes fully.

Note: The anti pinch function is suspended during this operation.

Linkage between Sunshade and Sunroof Glass

To prevent the sunshade from being exposed, the sunshade will move together with the sunroof glass as one unit when the sunroof is opened. To close the sunshade, the sunroof glass will close first.

Sunroof Initialisation

In the event of a power failure or battery disconnection when the sunroof glass or sunshade is in motion, the sunroof/sunshade will require initialisation when the power is restored.

To carry out the sunroof glass initialisation operation:

Fully close the glass - gently slide the switch forward to the 2nd position and hold in position for 10 seconds. The sunroof will open a preset amount and stop, it will then close automatically - the sunroof glass is then initiailised. During the whole process, the switch must remain in the 2nd position.

To carry out the sunshade initialisation operation:

Fully close the sunshade - slide the close switch forward to the 2nd position and hold in position for 10 seconds. The sunshade will open a preset amount and stop, it will then close automatically - the sunshade is then initiailised. During the whole process, the switch must remain in the 2nd position.

Thermal Protection

To prevent the sunroof glass motor and the sunshade motor from being overheated and damaged, the motors are designed with a thermal protection function.

After the thermal protection function is activated, the sunroof/sunshade does not respond to other operations except the closing operation. After the motor has cooled down and exits the thermal protection state, the sunroof can be operated normally until the next thermal protection event.

Interior Light

According to different configurations of the vehicles, the front interior lamp may feature bulb or LED configurations.

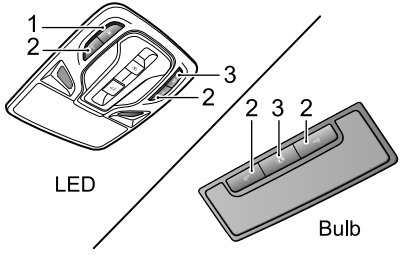

1 Main Manual Control Switch of Front/Rear Interior Lamps

2 Manual Control Button of Corresponding Front Interior Lamp

3 Automatic Control Button

Press switch 1 to turn on the front and rear interior lamps, press again to turn off.

Press either of the buttons 2 to turn on a corresponding front interior lamp, press again to turn off.

In addition to the manual control of the interior lamps, some operating conditions will activate an automatic control function. Press button 3 to turn on or turn off the automatic control.

Interior light illumination occurs automatically whenever the following occur.

- The car is unlocked.
- Any door is opened.
- The vehicle power system is switched off, providing the vehicle light sensor detects that the ambient light level is low or the sidelights have been illuminated during the previous 30 seconds.

Note: If a door is open for more than a certain period of time, the front interior lamp will be switched off automatically to avoid battery drain.

Power Socket

Front Power Socket

Please ensure the socket blanking plug is inserted when the power socket is not in use. This will ensure no debris or foreign objects enter the socket preventing its use or cause short circuits.

The 12V power socket has a voltage rating of 12V, and the maximum power of 120 Watt, please DO NOT use any electrical appliance that exceeds this rating.

Extended use of the accessory power socket and USB socket when the vehicle power system is switched off will cause premature discharging of the vehicle battery.

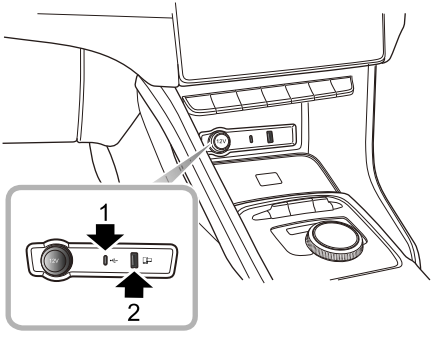

The 12V power socket is located in front of the shift control knob assembly in the centre console. It can be used as a power supply when the START/STOP Switch is in the ACC or ON/READY positions when the blanking plug is removed.

Located to the right of the power socket are two USB ports. Both of them can be used to provide a 5V power supply or a data transmission connection.

Note: Due to differences in configuration the charging function of the USB port will be slower.

Note: The vehicle is not supplied with a cigar lighter. If required please contact your local MG Authorised Repairer.

Rear USB Ports

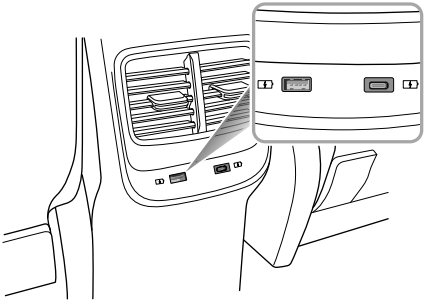

There are two USB ports located at the rear of the centre console, these provide a 5V power source as a power outlet.

Note: Due to differences in configuration the charging function of the USB port will be slower.

Top USB Port

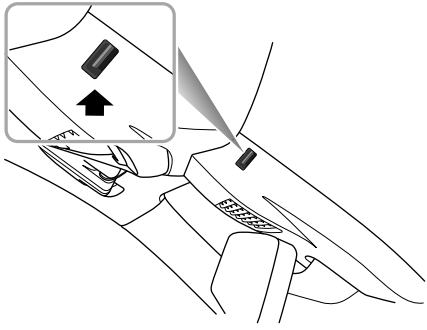

There is also one USB port located in the rear view mirror mounting trim cover, this provides a 5V power source.

Note: Due to differences in configuration the charging function of the USB port will be slower.

Wireless Charging System for Mobile Phones *

The wireless charging function for a mobile phone is realized without the necessity for a connection cable. It is achieved using electromagnetic induction.

Note: The wireless charging function does not apply to all mobile phones, only brands/models with wireless charging function.

Wireless Charging of Mobile Phones

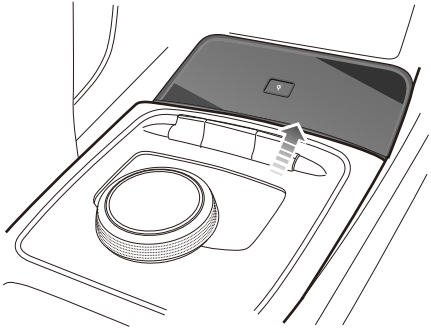

The wireless charging area is located in the area shown in the figure. The charging function is enabled when the START/STOP Switch is placed in the ACC/ON/READY positions. Place the phone face up horizontally in the charging area, which can be used for wireless charging.

Note: Only one mobile phone can be charged at a time.

Note: On bumpy roads, the wireless charging function of the mobile phone may intermittently stop and resume. If the mobile phone deviates from the charging area and stops charging, it will need to be placed back in the rechargeable area.

Note: The size of each brand of mobile phone is different, and the position of the charging coil on the mobile phone is different. Please adjust the position of the mobile phone accordingly. In addition, the case of some mobile phones may have an impact on wireless charging. It may be necessary to adjust or remove the case to achieve wireless charging.

If the mobile phone cannot be charged correctly, please make sure that there is no foreign matter in the wireless charging area or wait for the wireless charging area to cool down before further attempts. If it still fails, seek an MG Authorised Repairer.

IMPORTANT
When the wireless charging system of the mobile phone is being used, make sure that the smart key is 20cm or more away from the wireless charging area. Do not place coins, IC cards, metal keys, or other items with a large amount of metal composition in the wireless charging area with your phone. This may result in the failure of wireless charging function and create a safety hazard.

Storage Devices

Instructions

- Please close all storage devices when the vehicle is in motion. Leaving these storage devices open may cause personal injury in cases of a sudden start-off, emergency braking or a car accident.
- Do not place flammable materials such as liquid or lighters in any storage devices. The heat in hot conditions may ignite flammable materials and result in a fire.

Glove Box

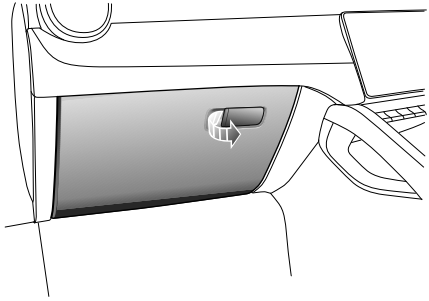

To open the glove box, pull the handle on the glove box cover (as indicated by the arrow).

Push the box cover forward to close the glove box. Make sure the glove box is fully closed when the vehicle is in motion.

Centre Console Armrest Box

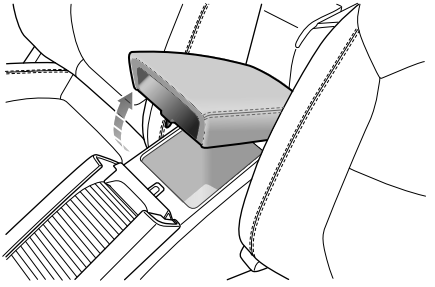

Lift the armrest (arrowed) to open the compartment cover. Put the cover down to close it.

Loadspace

DO NOT place articles on the rear parcel shelf, they could move causing personal injury in the event of an accident , emergency braking or hard acceleration.

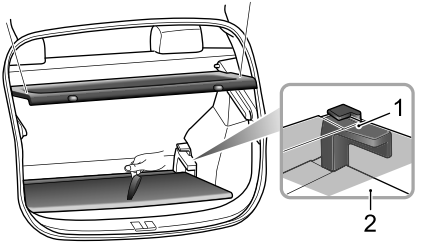

The rear parcel shelf is connected to the tailgate using straps and hooks. When opening the tailgate, the shelf will automatically be raised.

The spare wheel/tyre repair kit and tool kit are stowed beneath the loadspace carpet, lift the carpet for access. Always refit the carpet after use.

In addition, The loadspace carpet height can be adjusted by using the carpet bracket (figure 1, 2).

Glasses Box

The glasses box can be used only when the vehicle is stopped.

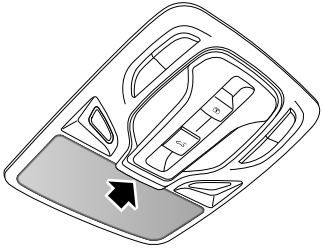

The glasses box is located in the proximity of the front interior lamps. Press the panel (as indicated by the arrow), and place the glasses into the glasses box after opening it. Close the glasses box when it is not in use.

Note: Only the glasses with the standard glasses frame can be put into the glasses box.

Cup Holder

Do not place hot drinks in the cup holder whilst driving. Spillage may result in personal injury or damage.

Centre Console Cup Holder

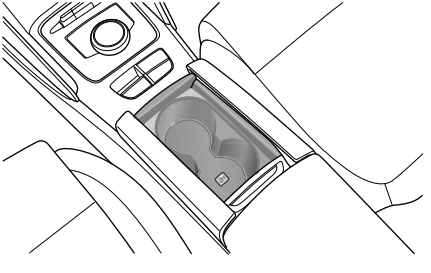

The centre console cup holder is situated at the front end of the centre console armrest assembly.

Roof Luggage Rack *

Roof loads MUST NOT exceed the maximum authorised load. This may lead to injury or vehicle damage.

Loose or improperly fixed loads may fall from the roof luggage rack and lead to an accident or cause injury.

When heavy or large items are carried on the roof luggage rack it may lead to changes in steering, handling and braking characteristics. Please avoid sharp maneuvers, heavy braking and excessive acceleration.

Pay attention to the following when using the roof luggage rack:

- Fix loads towards the front of the roof as far as possible, and distribute the roof load evenly.
- DO NOT use automatic car washes with loads on the roof luggage rack.
- The overall height of the car is different when loads are fitted to the roof luggage rack. Please ensure there is adequate clearance when entering tunnels and garages.
- Ensure the loads carried by the roof luggage rack do not impede operation of the sunroof, roof antenna of tailgate opening.
- When installing or removing a piece of loading equipment, follow the instructions provided by the manufacturer of the loading equipment.

Maximum Authorised Load for the Roof

The maximum authorised load for the roof is 75 kg, and the roof load includes the weight of the roof loads and that of the loading equipment installed.

Ensure you are aware of the weight of loads, and weigh them when necessary. Never exceed the maximum authorised load for the roof.

Periodical Check

Alway check the condition and security of bolt connectors and fasteners before using the rack luggage rack. Periodically check the condition and security of bolt connectors and fasteners.

Air Conditioning

76 Ventilation

79 A/C Control Panel

81 A/C Control Interface

Ventilation

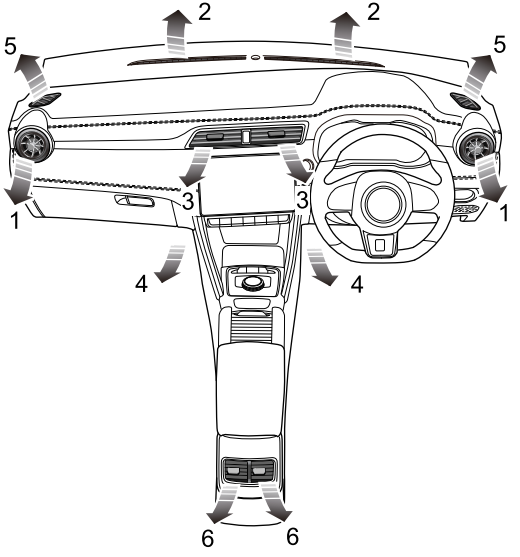

1 Side Vents
2 Windscreen/Defrost Vents
3 Centre Vent
4 Front Footwell Vents
5 Front Side Window Vents
6 Centre Console Vents

The air conditioning system is used to adjust the temperature, speed, humidity and cleanliness of the air in the car. Fresh air is drawn in through the air intake grille at the base of the front windscreen and A/C filter.

Always keep the air intake grille clear of obstructions such as leaves, snow or ice.

A/C Filter

The A/C filter is used to filter air. To remain fully effective, the filter should be replaced at the recommended service interval.

Vents

Centre Vents

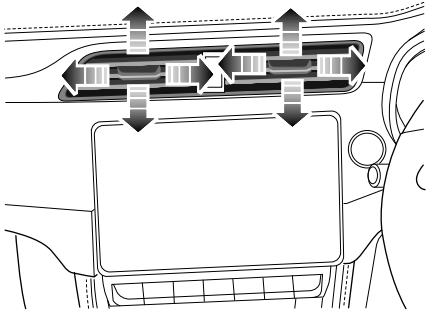

Slide the button in the centre of the louvres to the left or right to open or close the vent.

Toggle the button at the centre of each vent up and down, left and right to regulate the air direction.

Side Vents

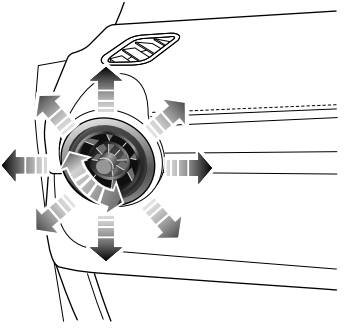

Rotate the centre thumb-wheel clockwise or anti-clockwise to open or close the vent.

Toggle the centre thumb-wheel up, down, left or right to adjust the air direction.

Centre Console Vents

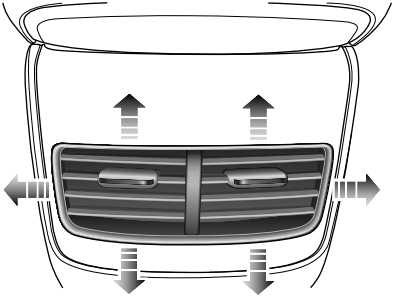

Slide the button in the centre of the louvres to the left or right to open or close the vent.

Toggle the button at the centre of each vent up and down, left and right to regulate the air direction.

A/C Control Panel

Control Panel

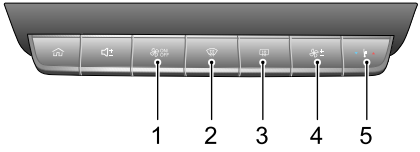

1 A/C Control Shortcut

2 Defrost/Demist Button

3 Heated Rear Window Button

4 Blower Speed Control Button

5 Temperature Control Button

A/C Control Shortcut

Short press the A/C control shortcut to display the air conditioning interface on the infotainment screen.

Long press the A/C control shortcut to switch the system on, all functions will revert to the state before shutdown. Long press again to switch off.

Defrost/Demist

Press Defrost/Demist Button on the control panel, the indicators on the button and display illuminate, the A/C cooling and external circulation functions are switched on, and the system enters the defrost/demist function to clear the windshield and side windows.

Press again to switch off. The indicator will go off and the system will return to the previous state

Whilst the defrost/demist is selected, operate the A/C on/off button to turn the compressor on/off; operate the air recirculation button to switch between internal recirculation and external circulation; operation of either

of these functions will not affect the defrost/demist function; operation of any other air distribution modes will quit defrost/demist.

Heated Rear Window

The heating elements on the inside of the rear window are easily damaged. DO NOT scrape or scratch the inside of the glass. DO NOT stick labels over the heating elements.

Press the Heated Rear Window Button to switch the function on or off. The button indicator illuminates when the function is on, and is extinguished when the function is off. The heated rear window features a timer function and will automatically switch off after a preset time. To continue to use the heated rear window, operate the button again.

Blower Speed Control Button

Press the blower speed control button upward or downward to regulate the blower speed.

Temperature Control Button

Press the temperature control button upward or downward to regulate the temperature of the air supplied by the vents.

A/C Control Interface

Control Interface - Connected Car *

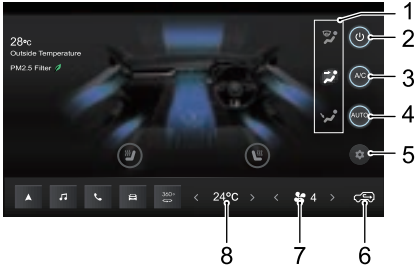

1 Air Distribution Mode Control
2 System On/Off
3 Cooling On/Off
4 Auto Mode
5 A/C Setting
6 Air Circulation Mode
7 Blower Speed Control
8 Temperature Control

Control Interface - Non Connected Car *

1 Air Distribution Mode Control
2 System On/Off
3 Cooling On/Off
4 Auto Mode
5 A/C Setting
6 Air Circulation Mode
7 Blower Speed Control
8 Temperature Control

Temperature Control

Touch the temperature control touch button to regulate the temperature of the air supplied by the vents.

Cooling On/Off

Touch the cooling On/Off touch button to operate the cooling function.

Note: A small amount of water may remain in the air conditioner after usage, this may produce a peculiar smell. If this is a particular issue, it is recommended to switch off the cooling function and run the blower for a while.

Auto Mode

Set the target temperature required and then press the AUTO touch button to enable the auto mode function. In auto mode, the air distribution mode, blower speed and other functions are automatically adjusted to reach and maintain the required temperature.

Manually adjust the air distribution mode or blower speed to exit auto mode. In this case the AUTO indicator will extinguish.

Note: To ensure the auto mode operates efficiently, all windows and the sunroof must be closed and the air inlet grille must be clear of obstructions. In addition, the A/C Auto control sensor should not be covered.

System On/Off

Touch the system On/Off touch button to switch the system on or off.

Blower Speed Control

Touch the blower speed control touch button to regulate the blower speed.

Air Distribution Mode

Select the corresponding Air Distribution Mode Touch Button as required to regulate the air distribution mode.

Touch Button On	Air Distribution Mode
	To ‘Face’
	To ‘Face + Feet’

Touch Button On	Air Distribution Mode
	To 'Feet'
	To 'Feet + Windscreen'
	To 'windscreen'

Note: The air distribution mode can also be switched by touching the air outlet area of the control interface.

To 'Face'. Directs airflow to the side and centre vents.

To 'Face + Feet'. Directs air to footwell, side and centre vents.

To 'Feet'. Directs air to footwell vents.

Note: In this mode, a small amount of airflow will be directed to the side, front side window and front windscreen vents.

To 'Feet + Windscreen'. Directs air to the footwell, front windscreen and front side window vents.

Note: In this mode, a small amount of airflow will be directed to the side vents.

To 'windscreen'. Directs air to the windscreen/defrost and front side window vents.

Note: In this mode, a small amount of airflow will be directed to the side vents.

Air Circulation Mode

Touch the air recirculation mode touch button to switch between air recirculation modes.

During internal recirculation, the air conditioning system circulates the air inside the car to meet the requirements of rapid cooling or heating, and at the same time, it can prevent the entry of traffic fumes.

During the external circulation, the air conditioning system draws air from outside the vehicle to ensure fresh air enters the vehicle.

During automatic circulation, the air conditioning system can automatically adjust the internal recirculation or external circulation according to the situation.

Note: Leaving the system in internal recirculation mode can cause the windscreen to mist. If this happens, turn on the defrost/demist mode.

Seats & Restraints

88 Seats

94 Seat Belts

105 Airbag Supplementary Restraint System

113 Child Restraints

Seats

Overview

To avoid personal injuries due to the loss of control, DO NOT adjust the seats while the car is moving.

The vehicle is equipped with 6-direction or 4-direction adjustable front seats and 60/40 split rear seats with foldable backrests.

An ideal position of the seat should make sure your driving position is comfortable, which allows you to hold the steering wheel with your arms and legs slightly bent and control all the equipment. Make sure your driving position is comfortable and enables you to maintain full control of the vehicle. Take care when adjusting the height of front seats - the feet of the rear passenger could become trapped when the seat is lowered.

Do not incline the front-seat backrest excessively. Optimum benefit is obtained from the seat belt with the backrest angle set to approximately 25° from the upright (vertical). The driver and front passenger seats should be positioned as far rearward as practical. A properly adjusted seat helps reduce the risk of injury from sitting too close to an inflating airbag.

Head Restraints

Adjust the height of the head restraint so that the top of it is in line with the top of the occupant's head. This location may reduce the risk of head and neck injuries in the event of a collision. DO NOT adjust or remove the head restraints while the car is moving.

DO NOT hang anything on any head restraint or head restraint rod.

The head restraint is designed to prevent rearward movement of the head in the event of a collision or emergency braking, thereby reducing the risk of head and neck injuries.

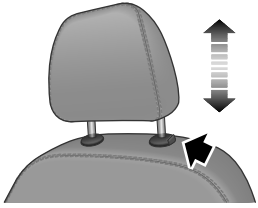

When adjusting the head restraints from a low to high position, pull the head restraint directly upward, and gently press it downward after it reaches the desired position to make sure that it is locked in position. To remove the head restraint, press and hold the guide sleeve button (as indicated by the arrow) on the left of the head restraint, then pull the head restraint upward to remove it.

When adjusting the head restraints from a high to low position, press the guide sleeve button (as indicated by the arrow) on the left of the head restraint, and press the head restraint downward; release the button after it reaches the desired position, and gently press the head restraint downward to make sure that it is locked in position.

Front Seats

Manual Seat

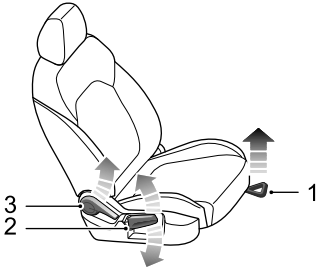

- Forward/Backward Adjustment

  Lift the lever (1) under the seat cushion, slide the seat into an appropriate position and release the lever. Make sure that the seat is locked in place.

- Cushion Height Adjustment *

  Lift the lever (2) repeatedly to raise the seat cushion, and press the lever downward to lower the seat cushion.

- Backrest Adjustment

  Lift the lever (3), adjust the backrest until it moves into a satisfiable position , and put down the lever.

Power Seat *

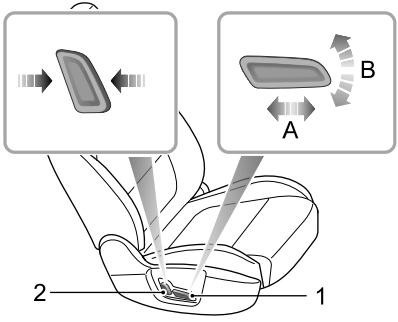

- Forward/Rearward Adjustment

  Push the switch (1) forward or backward (A) to move the seat forward/backward.
- Cushion Height Adjustment

  Pull the switch (1) upward or push downward (B) to raise or lower the seat cushion.
- Backrest Adjustment

  Move the switch (2) forward/backward to adjust the backrest until it reaches the desired angle.

Rear Seats

To increase luggage space, the rear seat backrest can be fully folded forward. When folding the backrest, first fully lower (or remove) all the rear seat head restraints, and then pull up the backrest unlock straps on both sides respectively and fold the seat backrests forward.

To return the backrest to an upright position, raise the rear seat backrest. When the desired upright position is reached, a 'click' will be heard. Ensure the backrest is locked in position.

Note: When the head restraint of the rear seat is not fully lowered or the backrest of the front seat is inclined backward excessively, the folding of the rear seat is very likely to damage the back of the front seat, small storage compartment or head restraint of the rear seat.

Note: When returning the rear seat backrest to the desired position, make sure that the rear seat belt is not trapped.

Front Seat Heating *

If bare skin is in contact with the heated seats for excessive periods of time, it may cause burns.

The seat cushion and backrest are provided with heating elements. After the vehicle is set to READY mode, access the air conditioning control interface and press the seat heating switch to control the heating function of the corresponding seat.

When pressing a seat heater switch, the corresponding seat will become warm. Press the switch again to stop the heating function. When the seat heating function is activated, the operating indicator in the switch illuminates. When the temperature reaches a certain temperature, the heating function will be deactivated automatically.

IMPORTANT
• DO NOT cover the heated seats with blankets, cushions or other insulation type objects or materials. • If the seat temperature has reached a certain temperature and continues getting hotter when using the seat heating system, please turn off the seat heating and contact an MG Authorised Repairer. • Overuse of the driver's heated seat may cause drowsiness and could affect safety.

Seat Belts

It is important that all seat belts are worn correctly. Always check that all passengers are wearing seat belts. DO NOT carry passengers that are unable to wear correctly positioned seat belts. Wearing seat belts incorrectly may cause serious injury or even death in the event of a collision.

Airbags can not replace seat belts. Airbags can only provide extra support when triggered, and not all traffic accidents will trigger airbags. Whether airbags are triggered or not, seat belts can reduce the risks of serious injury or death in accidents. Therefore, seat belts must be worn properly.

NEVER unfasten a seat belt whilst driving, serious injury or death may occur in the case of an accident or emergency braking.

This vehicle is equipped with a seat belt warning lamp to remind you to fasten your seat belt.

During driving, seat belts must be fastened , this is because:

- You can never predict if you will be involved in a collision accident and how serious it may be.
- In many cases of collision accidents, passengers with seat belts properly fastened are well-protected, while passengers with seat belts not fastened suffer from serious injury or even death.

Therefore, all passengers must wear seat belts correctly, even during short-distance journeys.

Protection Provided by Seat Belts

It is of equal importance for passengers in the rear seat to fasten their seat belts correctly. Otherwise, passengers with seat belts not correctly fastened will be thrown forward in accidents, and will endanger themselves as well as the driver and other passengers.

When the vehicle is in motion, the travelling speed of the occupants is identical to that of the vehicle.

In the event of a 'head on collision' or emergency braking, the vehicle may stop, but the occupants will carry on travelling until they come into contact with a stationary object. This object may be the steering wheel, dashboard, windscreen or front seats.

A correctly fastened seat belt will eliminate this risk of injury. When the seat belt is worn correctly, it will lock automatically in collision accidents or emergency braking to reduce your speed together with the vehicle, so as to prevent the out-of-control movement which may cause serious injury to driver and passengers.

Wearing Seat Belts

Incorrectly worn seat belts could cause injury or death in the event of an accident.

Seat belts are designed for one person, DO NOT share seat belts.

DO NOT wrap a seat belt around when holding a baby or child in your arms.

Remove any heavy coats or clothing when wearing a seat belt, failure to do so can affect protection provided by the seat belt.

Seat belts should not be wrapped around hard or sharp objects such as pens, spectacles or keys.

Seat belts cannot function correctly when the seats are reclined excessively. DO NOT drive when the seats are excessively reclined.

The seat belts fitted to your vehicle are designed for use by normal sized adults. This part of the literature refers to adult use.

All seat belts are 3 point lap-diagonal belts.

In order to maintain effective protection, the passengers must sit in the correct orientation, feet placed on the floor in front of them, with an upright body (no excessive recline) and the seat belt correctly fastened.

Fastening Seat Belts

Please follow the instructions below to fasten the seat belts correctly.

1 Adjust the seat correctly.

2 Hold the metal tab, pull the seat belt out steadily over the shoulder and across your chest. Ensure there is no twist on the belt.

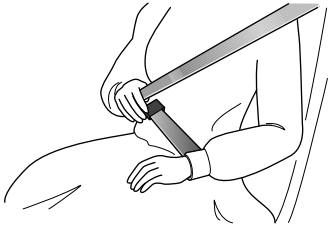

3 Insert the metal tab into the buckle until you hear a 'click', this indicates the seat belt is securely locked.

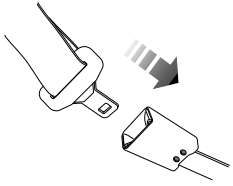

4 Remove any slackness in the belt by pulling up on the diagonal section of the belt.

5 To release the seat belt, press the red button on the buckle. The seat belt will retract automatically to its original place.

IMPORTANT

- Always ensure the seat belt will not become trapped in the door aperture when closing the door, damage will occur.
- Pulling the seat belt out too quickly may cause it to lock. In this case, allow the seat belt to retract slightly and then pull it across your body slowly.
- If it is difficult to pull the seat belt out, it may be due to twisted webbing. If this is the case, fully extract the seat belt, remove the twist, allow the seat belt to retract slowly.
- When using the rear seat belts please ensure they are fully retracted into the correct position to avoid jamming in the rear seat catches. Even if the seat belt is twisted, it is still required to be worn during driving, but the twisted part of the seat belt should not contact the passenger. When this happens, please go to an MG Authorised Repairer for repair.

Correct Routing of the Seat Belts

Ensure the seat belt is correctly positioned on the body, never cross the neck or abdomen, never pass the seat belt behind the back or under the arms.

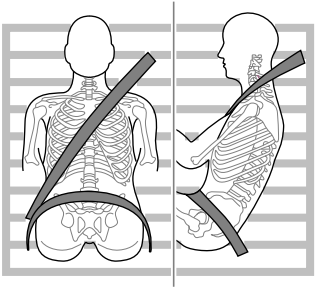

When wearing seat belts, the lap belt section should be positioned as low as possible across your hips, never across the abdomen. In the event of a collision, the lap belt can apply a force on the hips and reduce the possibility of you

slipping under the lap belt. If you slip under the lap belt, the belt will apply force on your abdomen, which may cause serious or fatal injuries. The diagonal section of the belt should cross the middle of the shoulder and the chest. In the event of emergency braking or collision, the diagonal section of the belt will be locked.

To ensure that the seat belts always provide maximum protection, ensure the belt is flat, not loose and contacts the body.

Seat Belts Use during Pregnancy

Wearing correctly positioned seat belts will provide protection for both mother and unborn child in the event of a collision or emergency braking.

The diagonal section of the seat belt should pass across the chest as normal, the lap section of the belt should pass below the belly, low and snug on the hip bones. NEVER position the belt on or above the belly.

Please consult your physician for further details.

Seat Belts and Disabilities

It is a legal requirement that all occupants wear seat belts, this include people with disabilities.

Depending upon the disability, consult your physician for further details.

Children and Seat Belts

Proper protection measures must be taken for children during driving.

For safety reasons, children must travel in a child restraint device fixed to the rear seat.

Infants

Only recommended child restraints suitable for the age, height and weight of the child should be used.

NEVER carry a child or infant with your arms during driving. When collision accidents occur, the weight of the child will produce so great of a force that you will not be able to hold on to the child. The child will be thrown forward and suffer serious injury or even death.

The seat belts fitted to your vehicle are designed for adults, they are not suitable for children. In the event of an accident or collision the children are not secure, it could cause death or serious injury.

Infants MUST use a suitable child restraint device. Please consult the child seat manufacturer's guidelines when selecting the correct seat. Follow the manufacturer's instructions on installation. Please refer to "Child Restraints" in this chapter for more details.

Older Children

NEVER share a seat belt amongst children. In the event of an accident or collision, the children are not secure. It could cause death or serious injury.

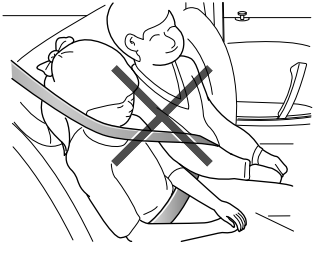

As children grow and become older/larger it will get to the stage when they no longer require child seat restraints. At this point they will require use of the vehicle standard seat belt. Please ensure the seat belt is correctly positioned on the body of the child.

When fastening a seat belt for a child always check it for correct positioning. Adjust the height of the seat belt to ensure the shoulder belt is kept away from the child's face and neck. Position the lap belt across the hips as low as possible, and tighten adequately. Correct positioning means that the seat belts can pass the applied force to the strongest part of the child's body in accidents.

If the shoulder belt is too close to the child's face or neck, it may be necessary to use a child booster cushion (always ensure that it meets any relevant laws or standards).

Seat Belt Pre-tensioners

The seat belt pre-tensioners will only be activated once and then MUST BE REPLACED. Failure to replace the pre-tensioners will reduce the efficiency of the vehicle's restraint system.

If the pre-tensioners have been activated, the seat belts will still function as restraints, and must be worn in the event that the vehicle remains in a drivable condition. The seat belt pre-tensioners should be replaced at the earliest opportunity by an MG Authorised Repairer.

The vehicle is fitted with seat belt pre-tensioners. These are designed to retract the seat belts and work in conjunction with the airbags in the event of a severe collision. They are designed to retract the seat belt and 'secure' the occupant in the seat.

The airbag warning light on the instrument pack will alert the driver to any malfunction of the seat belt pretensioners.(see ‘Warning Lights and Indicators' in the ‘Instruments and Controls’ chapter).

The seat belt pre-tensioners can only be activated once. After activation they must be replaced. This may also involve replacement of other SRS components. Please refer to 'Replacing Airbag System Parts'.

IMPORTANT

- Seat belt pre-tensioners will not be activated by minor impacts.
- The removal or replacement of a pre-tensioner must be carried out by the technicians trained by the manufacturer.
- 10 years from the initial date of registration (or installation date of a replacement seat belt pre-tensioner), some components will need to be replaced by an MG Authorised Repairer. The appropriate page of the Service Portfolio must be signed and stamped once the work has been completed..

Seat Belt Checks, Maintenance and Replacement

Seat Belt Checks

Split, worn or frayed seat belts may not function correctly in the event of a collision, if there are any signs of damage, replace the belt immediately.

Always ensure the red release button on the seat belt buckle is pointing upwards to ensure easy release in the event of an emergency.

Please follow the instructions below to check the seat belt warning lamp, seat belt, metal tab, buckle, retractor and fixing device regularly:

- Insert the seat belt metal tab into the corresponding buckle and pull seat belt webbing close to the buckle quickly to check that the belt clasp locks.
- Hold the metal tab and pull the seat belt forward quickly to check that the seat belt reel locks automatically, preventing the webbing from extending.

- Fully extract the seat belt and visibly examine for twists, fraying, splits or worn areas.
- Fully extract the seat belt and allow to return slowly to ensure continual and complete smooth operation.
- Visibly examine the seat belt for missing or broken components.
- Ensure the seat belt warning system is fully functional.

If the seat belt fails any of the above tests or inspections, contact an MG Authorised Repairer immediately for repairs.

Seat Belts Maintenance

DO NOT attempt to remove, install, modify, disassemble or dispose of the seat belts. Have any necessary repairs carried out by your MG Authorised Repairer. Inappropriate handling may lead to incorrect operation.

Ensure no foreign or sharp objects become lodged in the seat belt mechanisms. DO NOT allow liquids to contaminate the seat belt buckle, this could affect the buckle engagement.

Seat belts should only be cleaned with warm soapy water. DO NOT use any solvent to clean the seat belt. DO NOT attempt to bleach or dye the seat belt, it may weaken the seat belt. After cleaning, wipe with a cloth and allow to dry. DO NOT allow the seat belt to fully retract before it is completely dry. Keep seat belts clean and dry.

If there are contaminants accumulated in the retractor, the retraction of the seat belt will be slow. Please use a clean and dry cloth to remove any contaminants.

Replacing Seat Belts

Collision accidents may damage the seat belt system. The seat belt system may not be able to protect users after damage, which may result in serious injury or even death. After an accident, seat belts should be checked and replaced as needed immediately.

Seat belts should not require change after minor collisions, however, some other parts of the seat belt system may require attention. Please consult an MG Authorised Repairer for advice.

Airbag Supplementary Restraint System

Overview

The airbag SRS provides ADDITIONAL protection in a severe frontal impact only. It does not replace the need, or requirement to wear a seat belt.

The airbags together with the seat belts provide optimum protection for adults, but it is not the case for infants. The seat belt and airbag systems in the vehicle are not designed for protecting infants. The protection required by infants should be provided by child restraints.

The Airbag Supplementary Restraint System generally consists of:

- Front Airbags (fitted to the centre of the steering wheel and dashboard above the glove compartment)
- Seat Side Airbags (fitted to the outer side of the seat squab)
- Side Head Impact Protection Airbags (fitted behind the headlining)

Please note that this is model and trim level dependant.

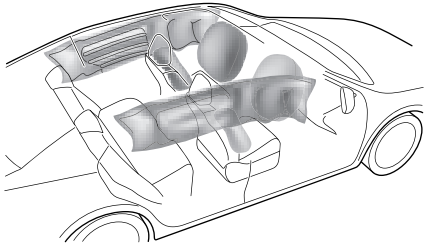

In the corresponding position where airbags are fitted, there is a warning sign stating 'AIRBAG'.

Airbag Warning Light

The airbag warning light is located in the instrument pack. If this lamp does not extinguish or illuminates during driving, it indicates that there is a failure in the SRS or seat belt. Please seek an MG Authorised Repairer at the earliest opportunity. An SRS or seat belt fault may mean the components may not be deployed in the event of an accident.

Airbag Deployment

Front seat passengers should not place feet, knees or any other part of the body in contact with, or in close proximity to a front airbag.

To minimise the risk of accidental injury from inflating airbags, seat belts should be worn correctly at all times. In addition, both driver and front seat passenger should adjust their seat to provide sufficient distance from the front airbags. If side airbags/side head impact protection airbags are fitted, both driver and front seat passenger should be seated to maintain sufficient distance from the upper part of the body to the sides of the vehicle, this will ensure maximum protection when the side airbags/side head impact protection airbags are deployed.

When airbags are deployed, children without proper protection may suffer from serious injury or even death. DO NOT carry children in the arms or on the knees during traveling. Children should wear seat belts suitable to age. DO NOT lean out of windows.

An inflating airbag can cause facial abrasions and other injuries if the occupant is too close to the airbag at the time of its deployment.

DO NOT affix or place any objects on, or adjacent to the airbags. This may affect the airbag passage or create projectiles that may cause injury or serious harm in the event of airbag deployment.

After deployment the airbag components become very hot. DO NOT touch any airbag related components, it may cause burns or serious injury.

DO NOT knock or strike the position where airbags or related parts are located, so as to avoid accidental airbag deployment which may cause serious injury or even death.

In the event of a collision, the airbag control unit monitors the rate of deceleration or acceleration induced by the collision, to determine whether the airbags should be deployed. Airbag deployment is virtually instantaneous and occurs with considerable force, accompanied by a loud noise.

Provided the front seat occupants are correctly seated and with seat belts properly worn, the airbags will provide additional protection to the chest and facial areas in the event of the car receiving a severe frontal impact.

Side airbags and side head impact protection airbags are designed to offer additional protection to the side of the body facing the impact, if a severe side collision occurs.

IMPORTANT

- Airbags can not protect lower body parts of passengers.
- Airbags are not designed for rear collision, minor frontal or side impacts, or if the vehicle overturns; nor will it operate as a result of heavy braking.
- Deployment and retraction of the frontal and side airbags takes place very quickly and will not protect against the effects of secondary impacts that may occur.
- When an airbag inflates, a fine powder is released. This is not an indication of a malfunction, however, the powder may cause irritation to the skin and should be thoroughly flushed from the eyes and any cuts or abrasions of the skin.
- After inflation, front and side airbags deflate immediately. This provides a gradual cushioning effect for the occupant and also ensures that the driver's forward vision is not obscured.

Front Airbags

NEVER use a rearward facing child restraint on a seat protected by an ACTIVE AIRBAG in front of it, DEATH or SERIOUS INJURY to the CHILD can occur.

Front seat passengers should not place feet, knees or any other part of the body in contact with, or in close proximity to a front airbag.

In extreme cases driving on very uneven surfaces may cause airbag deployment. Please take extra care when driving on uneven roads.

Airbags are designed to deploy during serious impacts, the following conditions may cause airbag deployment.

- A frontal collision with unmovable or non deformable solid objects at a high speed.
- Conditions that can cause serious chassis damage, such as a collision with kerbstones, road edges, deep ravines or holes.

Seat Side Airbags

The manufacture and material of the seat is critical to the correct operation of side airbags. Therefore, please DO NOT fit seat covers which may affect side airbag deployment.

In the event of a serious side impact, the relevant side airbag will deploy (only the affected side).

- The airbag will be deployed in the event that the side of the vehicle is impacted with a solid object or another vehicle.

Side Head Impact Protection Airbags

In the event of a serious side impact, the relevant side curtain airbag will deploy (only the affected side).

- The side curtain airbag will be deployed in the event that the side of the vehicle is impacted with a solid object or another vehicle.

Conditions in Which Airbags Will Not Deploy

The deployment of airbags does not depend on the vehicle speed, but on the object that the vehicle hits, angle of impact and the rate at which the car changes speed as a result of a collision. When the impact force of collision is absorbed or dispersed to vehicle body, airbags may not deploy; however, airbags may sometimes deploy according to impact condition. Therefore, the deployment of airbags shall not be judged based on the severity of vehicle damage.

Front Airbags

Under certain conditions the front airbags may not be deployed. Some examples are listed below:

- The impact point is not central to the front of the vehicle.
- The impact is not of sufficient force (the impact is with an object that is not solid, such as a lamp post or central barriers).
- The impact area is high (collision with the tailgate of a truck).
- Impacts to the rear or side of the vehicle.

- The vehicle rolling over.

Seat Side Airbags and Side Head Impact Protection Airbags

Under certain conditions the seat side and side head airbags may not be deployed. Some examples are listed below:

- Side impacts at certain angles.
- Light side impacts such as a motorcycle.
- Impacts that are not central to the side of the vehicle, either too far toward the engine compartment or the loadspace.
- The vehicle rolling over.
- The angled impact is not of sufficient force (the impact is with an object that is not solid, such as a lamp post or central barriers).
- The impact is not of sufficient force (with another vehicle, stationary or moving).
- The impact is from the rear of the vehicle.

Service and Replacement of Airbags

Service Information

DO NOT install or modify the airbag. Any changes to the vehicle structure or airbag system wiring harness are strictly prohibited.

Changes to vehicle structure is prohibited. This may affect the normal operation of the SRS.

DO NOT allow these areas to be flooded with liquid and DO NOT use petrol, detergent, furniture cream or polishes.

If water contaminates or enters the SRS it may cause damage and affect deployment. In this case contact an MG Authorised Repairer immediately.

To prevent damage to the airbag SRS, the following areas should be cleaned sparingly with a damp cloth and upholstery cleaner ONLY:

- Steering wheel centre pad.
- Area of dashboard containing the passenger airbag.
- Area of roof lining and front pillar finishers which enclose the side head impact protection modules.

If the airbag warning lamp fails to illuminate, stays on, or if there is damage to the front or side of the vehicle, or the airbag covers show signs of damage, contact an MG Authorised Repairer immediately.

IMPORTANT
• The removal or replacement of an airbag module should be carried out by an MG Authorised Repairer. • After 10 years from the initial date of registration (or installation date of a replacement airbag), some components will need to be replaced by an MG Authorised Repairer. The appropriate page of the Service Portfolio must be signed and stamped once the work has been completed.

Replacing Airbag System Parts

Even if the airbag does not deploy, collisions may cause damage to SRS in the vehicle. Airbags may not function properly after damage, and can not protect you and other passengers when a second collision occurs, which may cause serious injury or even death. To ensure that SRS can function properly after collision, please go to an MG Authorised Repairer to check airbags and repair as necessary.

Airbags are designed for using once only. Once the airbag is deployed, you must replace SRS parts.

Please go to an MG Authorised Repairer for replacement.

Disposal of Airbags

When your vehicle is sold, ensure that the new owner knows the vehicle is equipped with airbags, and is aware of the replacement date of SRS.

If the vehicle is scrapped, the undeployed airbags may have potential risks, therefore, before the disposal, they must be

deployed safely in a certain environment by a professional from an MG Authorised Repairer.

Child Restraints

Important Safety Instructions about Using Child Restraints

It is recommended that children below the age of 12 years old should be seated on the rear seat of the vehicle, in a child restraint system appropriate to the children's weight and size. Infants less than 2 years old should be restrained in an infant child restraint system.

It is recommended that a child restraint system that complies with UN ECE-R44 or ECE-R129 standard are fitted in this vehicle. Check markings on the child restraint system.

There are a number of child restraint systems available of different type and specification. For optimum protection, it is recommended that you choose restraint systems appropriate to the child's age and weight.

It is important to comply with installation instructions supplied by the child restraint manufacturer and that any child restraint system is properly secured to the vehicle. Failure to follow these instructions may cause death or serious injury to the child in an event of a sudden stop or accident.

- All occupants, including children must wear seat belts or use an appropriate child restraint.
- It is recommended that children under 12 years of age or less than 1.5 metres tall should use the appropriate child restraint fitted to the rear seat.
- Only one child can be carried in any one restraint.
- Do not put the child on the lap or in arms when sitting in any seat.
- Always adjust the seat back rest to a central position and ensure it is locked in position when installing a child seat or restraint.
- If installing a rear facing child restraint to the rear seat, the corresponding front seat should be adjusted forward; if installing a forward facing child restraint to the rear seat, you may need to adjust the height of the headrest to the lowest; if installing a forward facing child restraint to the front seat, you may need to remove its headrest.
- Never let your child stand or kneel on the seat during driving.

- Always ensure the child is seated correctly in the child restraint.
- The ways of using seat belts have a great influence on the maximum protection offered by the seat belt, you must comply with the child restraint manufacturer's instructions on proper use of seat belts. If seat belts are not properly fastened, a minor traffic accident may also lead to injury.
- Child restraints that are not fitted correctly may move and injure other occupants in the event of an accident or emergency braking. Therefore, even if there is no infant or child in the child restraint, it also should be fitted properly and securely in the vehicle.

Warnings and Instructions on Use of Child Restraint on Front Passenger Seat

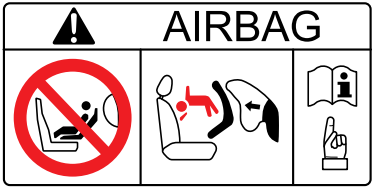

NEVER use a rearward facing child restraint on a seat protected by an ACTIVE AIRBAG in front of it, DEATH or SERIOUS INJURY to the CHILD can occur.

In cases where there is a need to install a rear facing child restraint on the front passenger seat, use the key to deactivate the front passenger airbag function, or severe injury or even death can occur.

Once the child restraint is removed from the front passenger seat, use the key to reactivate the front passenger airbag.

When installing a child restraint on the front passenger seat, move the front passenger seat as far rearward as possible.

Use one child restraint per child.

Please study the safety warning label on the sun visor. Where possible always install child restraints on the rear seat. If it is necessary to install a child restraint on the front seat please observe the warnings above.

Children's Safety and Side Airbags

Children should not be allowed in areas where airbags may be deployed, there is a risk of serious injury.

Only recommended child restraints suitable for the age, height and weight of the child should be used.

DO NOT place any items in areas where airbags may be deployed, there is a risk of serious injury.

In the event of a side collision, the side airbags can provide better protection for the passenger. However, when the airbag is triggered a very strong expansion force is generated, if the passenger's seating position is not correct, the airbags or items in the side airbag deployment area may cause injury.

When the correct child restraint is used to secure the child properly in the rear seat and the child's seating position is correct, there is enough space between the child and the side airbag deployment region for the airbag to deploy without any hindrance, and thus provide the best protection.

Child Restraints Groups

Secured Using 3 Point lap Diagonal Belts

Please DO NOT put the rear facing child restraint in the front passenger seat, this may cause serious injury or even death.

It is recommended that children should always be seated in the rear of the vehicle in a child restraint or restraint system , and fixed with 3 point, lap diagonal seat belts.

ISOFIX Child Restraint Systems

The ISOFIX anchorages in the rear seat are designed for use with ISOFIX systems only.

Child restraint anchorages are designed to withstand only those loads imposed by correctly fitted child restraints. Under no circumstances are they to be used for adult seat belts, harnesses, or for attaching other items or equipment to the vehicle.

Note: When installing and using any child restraint system, always follow the manufacturer's instructions.

Note: The rear seats fitted to this vehicle are provided with the ISOFIX interface (as indicated by the arrow in the following image), these are designed to connect to an ISOFIX child seat.

1 Fasten vehicle-approved ISOFIX child restraint systems to the mounting brackets.

2 When using ISOFIX mounting brackets for seat mounting, universally approved child restraint systems for ISOFIX may be used.

3 To fasten the top tether strap of the child restraint system, route the tether strap under the head restraint and attach to the anchorage hook being careful not to twist the strap. If not using ISOFIX lower anchorages, using the seatbelt, complete the installation in line with the child restraint manufacturers instructions.

Note: When using seat mounting, universally approved child restraint systems, Top-tether must be used.

4 After installation apply suitable force to ensure the restraint is securely fastened.

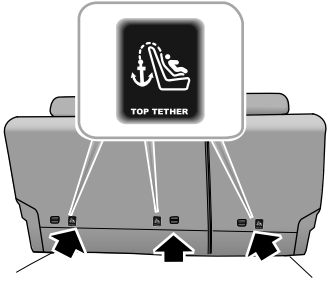

Approved Child Restraint Positions

It is recommended that a child restraint system that complies with UN ECE-R44 or ECE-R129 standard are fitted in this vehicle. Check markings on the child restraint system.

Approved Child Restraint Positions (for non ISOFIX Child Restraints)

Mass Group	Seating Positions		
	Front Passenger Without Front Passenger Airbag OFF Switch	Rear Outboard	Rear Middle
0 group (less than 10 kg)	X	U	U
0+ group (less than 13 kg)	X	U	U
I group (9 ~ 18 kg)	X	U	U
II group (15 ~ 25 kg)	X	U	U
III group (22 ~ 36 kg)	X	U	U
Note: Description of letters in the table: U = Suitable for universal child restraint systems approved for this mass group; X = Seat position not suitable for child restraint systems in this mass group.			

Approved Child Restraint Positions (for ISOFIX Child Restraints)

Seating Position		Mass group categories					
		0 group	0+ group	I group		II group	III group
		Rear facing		Forward facing	Rear facing	Forward facing	Forward facing
		13 kg		9 ~ 18 kg		15 ~ 25 kg	22 ~ 36 kg
Front Passenger Seat	Size Class	Not ISOFIX equipped					
	Seat Type						
Rear Outboard Seat ISOFIX	Size Class	C,D,E[1]		A,B, B1[1]	C,D[1]	—	—
	Seat Type	IL[2]		IL,IUF[3]	IL	IL[4]	IL[4]
Rear Centre Seat	Size Class	Not ISOFIX equipped					
	Seat Type						

Note: IL Suitable for particular ISOFIX child restraints systems of the semi-universal category. Please consult child restraints systems suppliers' vehicle recommendation lists;
IUF Suitable for ISOFIX forward facing child restraints systems of universal category approved for use in this mass group and ISOFIX size class;
[1]. The ISOFIX size class for both universal and semi-universal child seat systems is defined by the capital letters grade A ~

G. These identification letters are displayed on the ISOFIX child seat;
[2]. At time of publishing the recommended Group 0+ ISOFIX baby safety seat is the Britax Romer Baby Safe Plus;
[3]. At time of publishing the recommended Group I ISOFIX child seat is the Britax Romer Duo Plus;
[4]. At time of publishing the recommended Group II-III ISOFIX child seat is the KidFix II XP SICT and KidFix2 R.
Consult an MG Authorised Repairer for the latest details relating to our recommended child seats.

Table of I- Size child seats

The table gives a recommendation for which I- Size child seats suit which locations, and for what size of child.

The child seat must be approved in accordance with UN Reg R129.

Type of child seat	Front passenger seat	Rear outboard seats	Rear centre seat
I- Size child restraint systems	X	I-U	X

Note: I-U Suitable for use with forward and rear facing I- Size child restraint systems.
X Not suitable for use with I- Size restraint systems.

Group 0/0+ Child Restraint

When the front passenger airbag is active, never place a rear facing child restraint on the front passenger seat, severe injury or even death can occur.

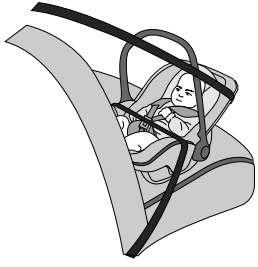

Child restraints that can be adjusted to lying position are most suitable for infants who are lighter than 10 kg (normally for those younger than 9 months) or those who are lighter than 13 kg (normally for those younger than 24 months).

Group I Child Restraint

When the front passenger airbag is active, never place a rear facing child restraint on the front passenger seat, severe injury or even death can occur.

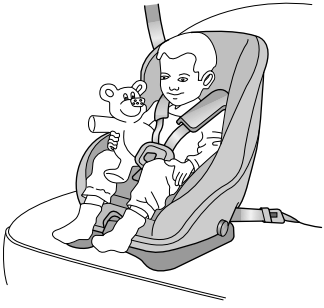

Backward/forward child restraints are most suitable for infants whose weight is 9 ~ 18 kg (normally for those older than 9 months and younger than 4 years old).

Group II Child Restraint

The diagonal section of the seat belt should pass across the shoulder and upper body, away from the neck. The lap section of the belt should pass across the hips, away from the abdomen.

The combination of child restraint and 3 point lap diagonal seat belt is most suitable for children whose weight is 15 ~ 25 kg (normally for those older than 3 years old and younger than 7 years old).

Group III Child Restraint

The diagonal section of the seat belt should pass across the shoulder and upper body, away from the neck. The lap section of the belt should pass across the hips, away from the abdomen.

The combination of child booster seat and vehicle 3 point lap diagonal seat belt is most suitable for children whose weight is 22 ~ 36 kg and whose height is below 1.5 m (normally for those about 7 years old or those older than 7 years old).

Starting & Driving

124 Keys

127 Child Proof Locks

128 Alarm System

134 Starting and Stopping the Power System

138 Pedestrian Alert Control System

139 Economical and Environmental Driving

142 Charging and Discharging Requirements

160 Electric Drive Transmission

169 Brake System

182 Adaptive Cruise Control System

191 Parking Aid System

194 Rear Driver Assistance System *

200 Tyre Pressure Monitoring System (TPMS)

202 Driving Assist System

218 Load Carrying

Keys

Overview

Please keep the spare key in a safe place - not in the car!

It is recommended that spare keys are not kept on the same key ring, since this may cause interference and prevent correct key recognition and therefore prevent the correct operation of the vehicle power system.

The smart key contains delicate circuits and must be protected from impact and water damage, high temperature and humidity, direct sunlight and the effects of solvents, waxes and abrasive cleaners.

Your vehicle is supplied with two smart keys, each one contains a back up mechanical key blade, this will operate the driver door mechanical lock. The smart keys supplied are programmed to the security system on the car, any key that is not programmed to the car will not operate the keyless entry function or the vehicle immobiliser.

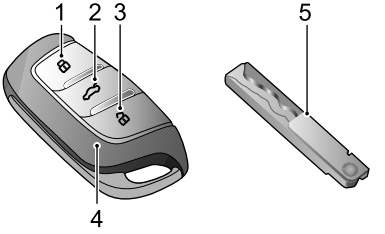

1	Lock Button	4	Smart Key
2	Tailgate Release Switch	5	Backup Mechanical Key
3	Unlock Button		

The smart key only works within a certain range. It's working range is sometimes influenced by the key battery condition, physical and geographical factors. For safety consideration, after you lock your vehicle by the smart key, please recheck if the vehicle is locked.

If your key is lost/stolen or broken, a replacement can be obtained from an MG Authorised Repairer. The lost/stolen

key can be deactivated. If the lost key is found, an MG Authorised Repairer can reactivate it.

Note: Any key made privately may not start the vehicle, and may affect the safety of your car. To obtain a suitable key replacement, it is recommended that you can consult an MG Authorised Repairer.

Note: The new key cannot be offered to you immediately because it requires programming to the vehicle by the MG Authorised Repairer.

Note: Avoid operating the smart key close to strong radio interference devices (such as notebook computers and other electronic products), the normal function of the key may be affected.

Replacing the Battery

Please use the picture guide to replace the smart key battery if any of the following conditions occur:

- The smart key locking/unlocking function range is reduced;
- The message centre will display "Remote Key Low Battery, Please Replace".

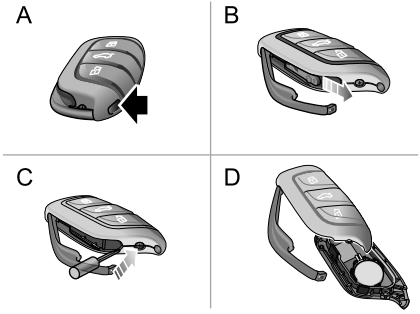

1 Press the button (A) on the smart key to eject the decorative trim.

2 Remove the backup mechanical key (B) in the arrowed direction.

3 Remove the screws using a cross flat head screwdriver(C)

4 Using a suitable flat bladed tool, insert the tool into the side of the key (C), carefully prise off the battery cover and separate the upper and lower casings (D).

5 Remove the battery from the slot.

6 Put the new battery in the slot, and make sure it is in full contact with the slot.

Note: Make sure that the polarity of battery is correct ('+' side facing down).

Note: It is recommended to use a CR2032 battery.

7 Refit the cover and press tightly, ensuring the gap around the cover is even.

8 Use a cross flat head screwdriver to lock the screws

9 Refit the mechanical key, and refit the decorative trim.

10 Operate the vehicle power system to resynchronize the key with the vehicle.

IMPORTANT
• Use of an incorrect or inappropriate battery may damage the smart key. The new replacement's rated voltage, sizes and specifications must be the same as the old one. • Incorrect fitting of the battery may damage the key. • Disposal of the used battery must be strictly in accordance with relevant environmental protection acts.

Advice about the Safe Disposal of Used Button/coin Batteries

For those used button/coin batteries, it's strongly recommended that:

- Dispose of used button/coin batteries immediately.
- Tape both sides of used button/coin batteries and dispose of them immediately in an outside bin, out of reach of children or recycle safely.

Child Proof Locks

NEVER leave children unsupervised in the vehicle.

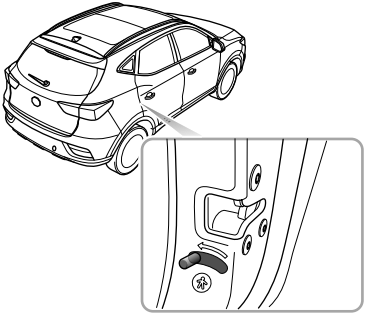

Steps for enabling or disabling the child proof locks are as follows:

- Open the rear door on the corresponding side, move the child proof lock lever to the lock position in the direction of the arrow to engage the child proof lock;
- Move the lever to the unlock position in the reverse direction of the arrow to disable the child proof lock.

With the child proof lock locked, the rear door on the corresponding side cannot be opened from inside the car, but can be opened from outside the car.

Alarm System

Your car is fitted with an electronic anti-theft alarm and power immobilisation system. To ensure maximum safety and operation convenience, we strongly recommend you to carefully read this chapter to fully understand the activation and deactivation of anti-theft systems.

Power Immobilisation

Power Immobilisation is designed to safeguard the vehicle from theft. The power immobilisation system can only be deactivated to start the car by using the matched key.

Press the START STOP button on the instrument panel, once a valid key is detected in the vehicle, immobilisation system will be deactivated automatically.

If the message centre displays "Smart Key Not Detected" or "Put Key Into Back-up Position" or the power immobiliser system warning lamp illuminates, please put the smart key at the bottom of the centre console cup holder (refer to "Alternative Starting Procedure" in "Starting and Stopping the Power System" section), or try to use the spare key. If the car can still not be started, please contact MG Authorised Repairer.

Body Anti-theft System

Locking and Unlocking

When the vehicle is locked, the indicator lamps flash three times; when it is unlocked, the indicator lamps flash once.

Operation of Door Lock System (Key)

Key Locking

- Using the remote key to lock: press the lock button on the key to lock the car after closing the doors, bonnet and tailgate.
- Using the mechanical key to lock: partially operate the door release handle, using a suitable flat blade tool, insert the tool into the underside of the trim and carefully remove the door lock trim cover, insert the key into the driver door lock and turn counterclockwise to lock the car.

Key Unlocking

- Using the remote key to unlock: press the unlock button on the key to unlock the car.
- Using the mechanical key to unlock: partially operate the door release handle, using a suitable flat blade

tool, insert the tool into the underside of the trim and carefully remove the driver door lock trim cover, insert the key into the driver door lock and turn clockwise to unlock the car.

Find My Car

After the vehicle has been left in a locked condition for a few minutes pressing the lock button again on the remote key will enable the Find My Car function. This function will identify the car by means of an audible and visual alert. Pressing the Lock button on the handset again will suspend this operation. Pressing the Unlock button will cancel this operation. This feature can be set on the entertainment display.

Note: If the vehicle power system is not switched to the ACC/ON/READY position within 15 seconds after the vehicle is unlocked with the mechanical key, the immobilisation alarm will be triggered.

Note: If no panels are opened within a few seconds after the vehicle is unlocked by using the remote key, all doors will automatically re-lock.

Operation of Door Lock System (Keyless)

The keyless entry system can lock and unlock the doors and tailgate as long as you carry the smart key and approach to the car.

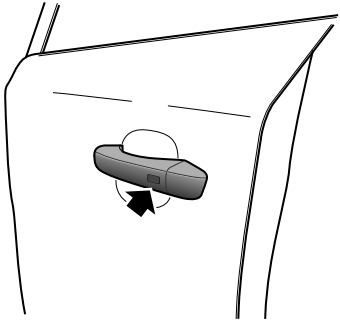

IMPORTANT
The smart key must be within 1.5 metres of the vehicle for the keyless system to operate correctly.

Keyless Locking

After switching the START/STOP Switch to the OFF position and exiting the car, press the door handle button once before moving away from the car to lock all doors and tailgate (no need to press the lock button on the key). Note, this will also arm the alarm and immobilise the vehicle.

Keyless Unlocking

Press the button on the front door handle once to unlock the car, then pull the door handle to open the door.

Note: When the vehicle is locked, if you are within the smart key range and operate the door handle button, but carry out no further action, after 30 seconds the vehicle will automatically re-lock itself to remain secure.

IMPORTANT
After the door is locked by using the key, press the button on the door handle to unlock the car. If the car cannot be unlocked or locked normally, seek an MG Authorised Repairer.

Mislock

If the driver's door is not fully closed when the smart key lock button is pressed, or the START/STOP Switch has not been switched OFF, the vehicle horn will sound once, indicating a mislock. In this case, none of the doors will lock, the alarm system will not be armed.

If the driver's door is closed, the passenger door, bonnet and tailgate are not fully closed, the horn sounds once to indicate mislock when the car undergoes locking operation. However, the 'partial arming' attributes of the security system will enable as much of the system to be armed as possible (all fully closed doors, bonnet or tailgate apertures will be protected, but an open door will not!). The alarm indicator will flash. As soon as the open aperture is closed, the system will automatically revert to an armed state

Anti-theft Alarm Sounder

If the anti-theft alarm has been triggered, the car horn will sound continuously. Press the UNLOCK button on the key, the anti-theft alarm will be deactivated.

Interior Lock and Unlock Switch

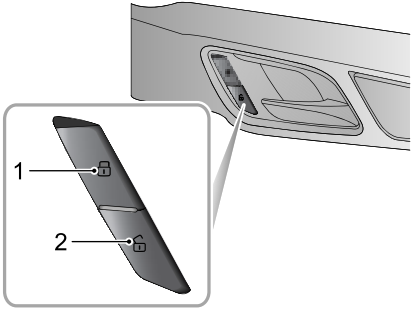

1 Lock Switch

2 Unlock Switch

When the anti-theft alarm system is not in operation, press the lock switch (1) to lock all doors; press the unlock switch (2) to unlock all doors.

Note: If the anti-theft alarm system is switched on, pressing the lock/unlock button will not lock/unlock the doors but will trigger the alarm system.

If the doors, bonnet and tailgate are closed, press the interior lock switch. The yellow indicator on the interior lock switch illuminates.

If a mislock is caused by non-driver door, tailgate or bonnet, press the interior lock switch. The yellow indicator on the interior lock switch illuminates.

Interior Door Handles

Use the interior door handle to open the door:

1 Pull the interior door handle once to unlock the door.

2 Pull the interior door handle again to open the door.

Speed Lock

All the doors will be locked automatically when the road speed exceeds 10 mph (15 km/h).

Automatic Unlock

When the vehicle power system is switched to the OFF position, all the doors will be unlocked automatically.

Tailgate

If the tailgate can not be closed due to the type of cargo loaded, be sure to close all windows during driving, select the face distribution mode of the air condition, and set the blower to maximum speed, so as to decrease any fumes entering the vehicle.

Tailgate Open Mode

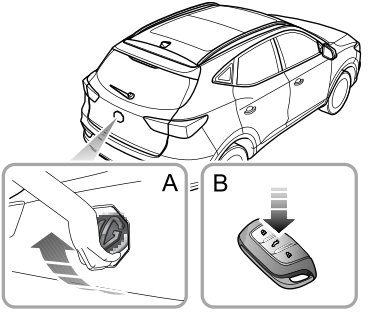

The tailgate can be opened by using the following 2 methods:

1 When the vehicle is unlocked or the matched key appears within 1m range around the tailgate, directly open the tailgate by turning over the emblem on the tailgate (Figure A).

2 When START/STOP Switch in the OFF position, press the release button on the remote key (Figure B) for more than 2 seconds to open the tailgate.

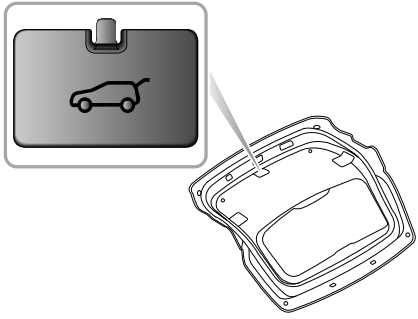

Emergency Tailgate Opening

The emergency tailgate release access is located in the centre of the tailgate trim.

Fold down the rear seat to gain access, remove the blanking plug, and rotate the emergency open knob counterclockwise to open the tailgate from inside.

Starting and Stopping the Power System

START STOP Switch

The keyless START STOP switch is located in the fascia to the left of the steering column, it is a push button style switch. To operate the switch the smart key must be inside the vehicle.

The operational status displays are as follows:

Indicator Off (OFF)

If the switch has not been operated and there are no indicators illuminated, the power system is OFF. The power seats and electric door mirrors remain operational.

Yellow Light (ACC)

Pressing the START STOP button without the footbrake being applied whilst the vehicle power system is OFF will place the system in the ACC state, this will illuminate the yellow indicator in the switch button. The ACC position allows operation of certain ancillaries such as power windows.

Green Light (ON/READY)

- Whilst in the ACC state, pressing the START STOP button without the footbrake being applied will place the system in the ON state, the green indicator will illuminate. This will allow the remaining electrical systems to operate.
- Pressing the START STOP button with P selected and the footbrake applied will place the vehicle in the READY state, the green indicator will illuminate and the word READY will appear in instrument panel information display. This indicates that all electrical

systems will operate and the vehicle is ready to be driven.

Note: Whilst in the OFF state, if the driver exits the vehicle leaving the smart key inside, after the second operation of re-opening the driver's door, the instrument pack message centre will display a warning message to indicate that the key is still in the car.

Note: To remove the electronic shift control knob from P the vehicle must be in an ON/READY state and the footbrake applied.

If your car is subject to strong radio signals the keyless entry and start systems may suffer from interference and not function correctly. Please see the 'Alternative Starting' procedure.

READY Mode

Setting the power system into READY mode:

1 Ensure all unnecessary electrical loads are switched off.

2 Ensure P or N is selected (If the shift control knob is in any other position the power system cannot be switched to the ON/READY state)

3 Press brake pedal.

4 Press the START/STOP Switch (do not hold the button in, release immediately)

IMPORTANT
• If the vehicle will not enter a READY state, please check for any warning indicators or messages displayed in the instrument pack message centre. In extremely low temperatures please allow 5 minutes between power up attempts, if after 3 attempts the power state cannot be set to READY please consult an MG Authorised Repairer or breakdown service. • Do not leave the power system in an ACC or ON/READY state for long periods of time, excessive use of electrical equipment may lead to to a discharged battery. • The vehicle is fitted with an anti-theft system. Independently sourced keys may not allow vehicle entry and system power up. Any new keys will require programming using the manufacturers software. • Your car is fitted with complex electronic control systems, please ensure that all other radio transmission or electromagnetic devices are kept away from the smart key and centre console cubby areas. They may cause interference and operational issues. Please see the 'Alternative Starting' procedure.

Alternative Starting Procedure

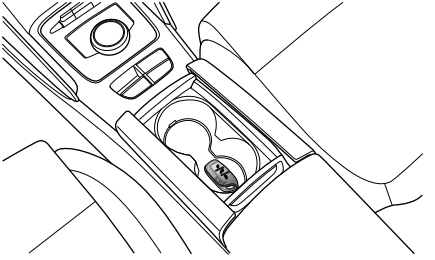

If the vehicle is located in an area where there are strong radio signals causing interference or the smart key battery condition is low, please use the following steps to attempt to start the car:

1 Place the smart key centrally in the centre console cup holder cubby box with the buttons facing upward - as shown in the illustration.

2 Ensure P or N is selected, press the brake pedal and then press START/STOP Switch to power the vehicle.

If the vehicle power system cannot be changed after the car has left the area of strong radio interference or had the smart key battery replaced please consult an MG Authorised Repairer.

IMPORTANT
The Alternative Starting Procedure should only be required if the smart key battery is very low or flat. Once the vehicle has been removed from the area of excessive radio interference the keyless entry and Start Stop systems should return to normal.

Switching the Power System OFF

Setting the power system to OFF:

1 After bringing the car to a halt, ALWAYS maintain brake pedal application.

2 Using the electronic shift control knob select (P), this will automatically apply the parking brake - please check that the parking brake is applied.

3 Press START/STOP Switch to shut down the power system.

Note: Please observe the park brake warning light and message displayed in the instrument pack message centre confirming that the parking brake is applied before exiting the vehicle.

Pedestrian Alert Control System

In order to improve the safety, your car is fitted with a Pedestrian Alert System. When the vehicle is travelling at a low speed, the system controls a speaker that sounds to remind pedestrians in the vicinity of your presence.

Strategies of sounding warnings

The speaker sounds when all of the following conditions are met:

1 The vehicle is READY;

2 The pedestrian alert system is fault free;

3 During acceleration, the vehicle speed is less than 30km/h; during deceleration, the vehicle speed is less than or equal to 25km/h.

Economical and Environmental Driving

Running-in

The brakes and tyres need time to 'bed-in' and adjust to the demands of everyday motoring. During the first 900 miles, please avoid heavy braking where possible.

Economic Driving

The way in which you drive your car has a significant bearing on the life span of the car and battery.

Drive Smoothly

Anticipating obstructions and slowing down well in advance, avoids the need for unnecessary acceleration and harsh braking. A smooth driving style not only improves battery/distance performance, but can reduce the amount of wear on the brakes and tyres.

Avoid Driving at Maximum Speed

Power consumption and noise levels rise significantly at higher speeds.

Driving Foreseeingly

Avoid roads with traffic congestion or traffic jams. Foresee road congestion as early as possible , keep enough distance from the car in front during driving, and slow down in time. Avoid lengthy and heavy brake pedal applications when they are not necessary, these will cause the brakes to overheat and cause premature brake wear.

Use of Electrical Equipment

Use of electrical equipment will reduce the power available from the battery. Whilst it is essential to maintain a comfortable interior environment, excessive use of systems such as A/C will increase power consumption and reduce the vehicle range.

Driving in Special Environment

Driving in Rain or Snow

Emergency braking, accelerating and steering on slippery roads will reduce the vehicle's handling performance and grip.

- When raining, the windows may fog, reducing visibility (Use the Air-conditioning demist function).
- Grip will be reduced, so please drive carefully.
- Reduce speed when it rains. Avoid aquaplaning (the effect of a film of water between the tyres and the road) affecting steering and braking performance.

Driving through Water

Avoid driving through floods after heavy rain, which may lead to serious damage to the vehicle.

Check and Service

Check Tyre Pressures Regularly

Under-inflated tyres increase the rolling resistance of the car which, in turn, increases power consumption. Over or under-inflated tyres wear out more rapidly and also have a detrimental effect on the car's handling characteristics.

Do not Carry Unnecessary Loads

The additional weight of unnecessary loads wastes power, especially in stop/start conditions where the car is frequently required to set off from stationary.

Maintain Correct Four-Wheel Alignment

Maintain the correct wheel alignment. Avoid collisions with the kerb and reduce speed on uneven road surfaces. Out of specification wheel alignment will not only lead to excessive tyre wear, but also increases the load and power consumption.

Charging and Discharging Requirements

Under normal circumstances it is strongly recommended that you use a slow charging method, avoid constant or regular use of rapid chargers.

Prior to using any charging equipment please inspect the sockets, plugs and cables for any damage. DO NOT use any equipment that shows signs of misuse or damage.

It is recommended that the charging cable be connected to the charging device before connecting to the vehicle and charging commences.

DO NOT attempt to switch the vehicle power system to READY during charging.

After charging completion, switch off the charger (where necessary), disconnect the cable from the vehicle, fit the waterproof blanking plugs, close the charging point door. If necessary you can then disconnect the cable from the charger (where applicable).

Whilst charging the car on rainy days, where possible, please avoid connecting the charger during torrential rain or storms. If excessive water is evident around the charging plugs please use a suitable cloth to dry the area as best possible before removing the waterproof blanking plugs and connecting the charging cables.

DO NOT touch the charging connector or charging plug when your hand is wet.

DO NOT stand in water or snow when connecting or disconnecting the charging cable.

***DO NOT** attempt to charge when the charging connector and plug are wet.*

***Always** keep the charging connector and charging plug in clean and in a dry condition. Be sure to keep the charging cable in a condition where there is no water or moisture.*

***Only** use the correct charger for charging the electric vehicle. Using any other charger or connector configuration may cause failure.*

***Take** care not to drop the charging connector. This could result in damage.*

***STOP** charging or discharging immediately if you find anything abnormal, such as sparks, burning or smoke.*

***Always** hold the charging connector handle or plug when connecting or removing the charging cable, if you pull the cable itself (without using the handle), the internal wires may disconnect or get damaged. This may lead to electric shock or fire.*

***High** voltage charging or discharging equipment can cause interference with electronic medical devices. When using medical electrical devices such as pacemakers, please consult your doctor about whether charging or discharging your electric vehicle will impact the operation of the device. In some instances, electromagnetic waves that are generated from the charger can seriously impact medical electric device operation.*

***NEVER** use a high powered jet wash directly on the charger door or to clean around the charge point.*

Charging Your Vehicle at Home

Whilst your MG has been supplied with a home charging kit, it is essential that you check with a qualified electrician that the infrastructure of your property will support the charging equipment. Please seek qualified advice that your current electrical supply and circuits will support the requirements of the charging equipment.

Installed Charging Points

Various companies will supply and install charging points to your property, MG insist that only qualified reputable suppliers and installers are used - failure to have the correct equipment installed by a qualified professional may result in overloaded circuits and fire.

Home Charging Guide

ONLY use certified approved equipment.

ONLY use qualified suppliers and installers.

When the battery is fully charged, disconnect the cable plug from the vehicle socket - if it is necessary to interrupt the charging of the vehicle, isolate the power supply first , then disconnect the vehicle plug.

NEVER allow water or fluids to enter or contaminate your charger or vehicle charging sockets.

NEVER use damaged charging points, equipment or sockets.

STOP charging immediately if you see anything unusual, smell something burning or see sparks.

ALWAYS follow the operating instructions supplied with your charging equipment.

Note: The charging point and power supply infrastructure must be installed and serviced by suitable qualified personnel from an approved installation company using only the materials recommended by them.

Charging and Medical Condition Awareness

High voltage charging equipment can create areas of strong electromagnetic interference, this may cause operational issues with electronic medical devices.

When using medical electrical devices such as pacemakers or cardioverter defibrillators (ICD's), please consult your doctor about whether charging your electric vehicle will an impact on the operation of the device. In some instances, electromagnetic waves that are generated from the charger can seriously impact medical electric device operation.

Note: There are no cautions issued about medical devices when the car is not charging. It is perfectly safe for individuals fitted with pacemakers or cardioverter defibrillators to drive or ride in the vehicle.

Charging Port

The charging port is located behind the charging port door mounted in the front bumper. It is incorporated into the master locking system.

To open the door, ensure the vehicle is unlocked, press the charging port door and release - the door will open to open the waterproof plug covers.

Open the plug covers to reveal the combined charging port.

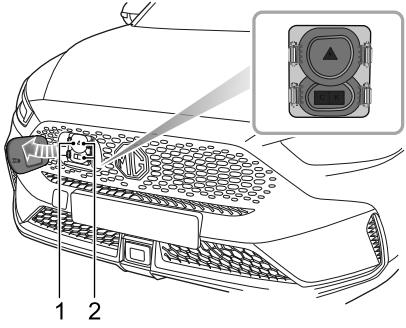

1 Slow and Fast Charge Port - 7 Pin - Type 2 Plug

2 Rapid Charge Port - 7 Pin and 2 Pin - CCS Type Plug

The upper plug covers the 7 pin slow/fast charging socket (1). The lower plug covers the rapid charging socket (2).

Note: In order to use the rapid charger socket, both waterproof plug covers will require removal.

After charging, refit the waterproof plug covers, close the charging port door, push the door fully home until the latch locates.

ALWAYS ensure that any excess water is removed from the port area before connecting any charging device.

Charging Port Electronic Lock

In order to prevent the charging connector and cable being disconnected inadvertently during charging, the charging socket features an electronic locking mechanism.

The electronic lock is activated as soon as the vehicle begins charging, and remains in a locked state until the charging is finished or interrupted.

Whilst the charging cable is connected DO NOT attempt to remove the plug.

Note: If the vehicle is unlocked during the charging process, charging will be suspended. Charging will resume after 1 minute. If charging does not automatically resume, it may be necessary to remove and refit the charger cable.

Manually Releasing the Charging Port Lock in Emergency Situations

The vehicle features an emergency release device for the charging port lock.

To access the manual release, raise the bonnet and locate the release cable on the O/S of the radiator cowling assembly - see picture.

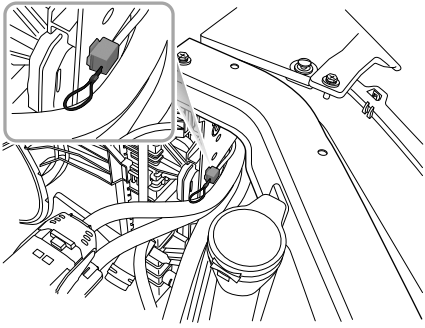

Pull the release cable handle, remove the connector plug whilst maintaining tension on the cable this will release the locking device.

Electric Charging Identifier Label *

Identifier Label on Slow Charging Kit

1 AC charging identifier label

Note: Users can purchase a slow charging kit from an MG Authorized Repairer.

Identifier Labels on Charging Port

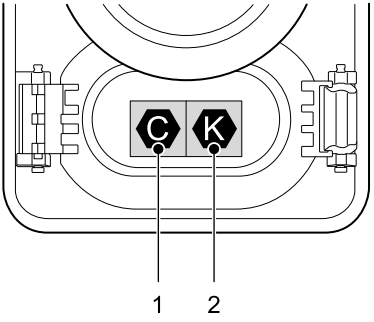

1 AC charging identifier label

2 DC charging identifier label

Precautions for AC or DC charging

After opening the charging port door, check the charging identifier symbol on the plug cover. Check the charging connector identifier symbol on the AC or DC charger cable. After checking that the alphabetic characters of the charging identifier symbols match, proceed the next charging step.

Note: Risk of failure, fire or injury etc. when using a charging connector with unmatched identifier symbols.

Electric charging identifier label symbol table

Supply Type	Configuration	Type of Accessory	Voltage range	Identifier
AC	7P	Vehicle connector and vehicle inlet	≤480V	C
DC	7P+2P	Vehicle connector and vehicle inlet	50V–500V	K

Rapid Charging

Note: Please read any equipment operating instructions carefully prior to using the rapid charging station. Each type of charger may use different instructions.

Note: The cable of the charging plug should be shorter than 30 m.

If you have any doubts, please seek professional assistance.

Rapid Charging Safety Precautions

- Before connecting the rapid charger, switch the vehicle power system OFF and wait 10 seconds.

Note: If at any time during the charging process you should want to check the state of charge, please switch the vehicle power system to the ON position. The high voltage battery state of charge will be displayed in the message centre in the instrument pack.

Note: Considering the safety and service life of the high voltage battery, when using a rapid charging station to charge the vehicle the battery will not become fully charged, and therefore the instrument pack may display less than 100% power. If you have a long journey planned, it is recommended that you use a slow charging point to charge the vehicle so as not to affect your journey (Battery Pack Type 1).

Slow Charging

Note: Carrying out a full slow charge is the only way for the high voltage battery to reach the optimal equilibrium state (equalisation charge).

High voltage battery chargers are available with various power outputs. Chargers with outputs of up to 3 kW are generally considered as slow chargers, 7 - 22 kW are considered fast chargers and rapid chargers are available in AC or DC outputs. Generally the AC chargers are rated at 43kW and the DC chargers at 50kW plus.

Charging times are dependent on charger output.

To carry out an equalisation slow charge, it is recommended that the charger output does not exceed 7kW.

AC Charging Points

IMPORTANT
Please ensure that only charge points that meet IEC 61851 and IEC 62196 are used to connect to your vehicle.

Using an AC charging device:

1. Ensure the vehicle power system is OFF and all doors are closed.
2. Open the charging port door, remove the waterproof plug cover from the 7 pin charging plug connector.
3. Plug the cable from the charger point into the vehicle. Lock the vehicle.
4. On completion of the charge , shut off the power, unlock the vehicle and disconnect the plug from the vehicle.
5. Ensure the charge socket is free from debris, fit the waterproof plug cover. Close the charging point door.

Note: If at any time during the charging process you should want to check the state of charge, please switch the vehicle power system to the ON position. The high

voltage battery state of charge will be displayed in the message centre in the instrument pack.

Residential Charging

During the charging operation the vehicle power system must be OFF. Carry out the following procedure to charge the vehicle:

1 Ensure the vehicle power system is OFF and all doors are closed.

2 Open the charging port door, remove the waterproof plug cover from the 7 pin charging plug connector. Ensure the surroundings are clean, dry and free from debris.

3 Connect the 7 pin charging plug to the socket on the vehicle.

4 Connect the charging device plug to the domestic electricity supply. Lock the vehicle.

5 On completion of the charge, shut off the power, unlock the vehicle, disconnect the charging cable from the vehicle, and then the domestic plug.

6 Ensure the charge socket is free from debris, fit the waterproof plug cover. Close the charging point door.

Note: If at any time during the charging process you should want to check the state of charge, please switch the vehicle power system to the ON position. The high voltage battery state of charge will be displayed in the message centre in the instrument pack.

Charging Information

At the beginning of the charging process, the following information will be displayed within the instrument pack message centre.

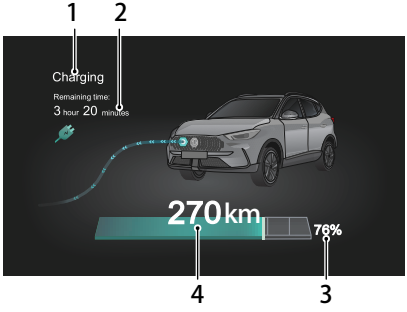

1 Charging status
2 Charging time
3 High voltage battery pack status
4 Driving range

Note: The information displayed on the instrument pack may be different based on vehicle configuration.

Equalisation Charging

Equalisation charging means that after a normal charging process the battery management system will enter a mode where it will attempt to equalise the charge of every battery cell.

If an equalisation charge has not been carried out for some time, the message centre in the instrument pack will display 'Please Slow-charge the Vehicle'. Please refer to 'Slow Charging' in the 'Starting and Driving' section.

On average it takes at least 11.5 hours (battery pack type 1) or 8.5 hours (battery pack type 2) to complete a charge that includes the equalisation charge.

Note: Ambient temperatures have an effect on charging times. It may take longer to complete a charge when the ambient temperatures are low.

Charging Times

Charging times of the high voltage battery can vary depending upon numerous factors, these include: current capacity, charging mode, ambient temperature and device type/power.

Rapid Charging Time

Rapid chargers will vary in power output, on average it will take approximately 40 - 60 minutes to charge the high voltage battery up to 80% (80% displayed in IPK) using an average rapid charger.

Note: Ambient temperatures have an effect on charging times. It may take longer to complete a charge when the ambient temperatures are low or high.

Slow Charging Time

On average it takes approximately 10.5 hours (battery pack type 1) or 8 hours (battery pack type 2) to charge the high voltage battery from low battery warning to 100% (charge quantity can be checked using the instrument pack).

- At low temperatures the charging time will be extended.

- If an equalisation charge has not been conducted for a long time the required charge time will be extended.
- An equalisation charge must be carried out prior to using the car after a long period of storage or non use. In these cases the charging time will be extended.

Note: The slow charging notes above relate to using an AC charging device. Use of the slow charging device using a domestic power supply can increase the charging times by up to 3 times.

Indicative Charging Times for Battery Pack Type 1

Note: These times are only a guide.

Rapid charging		From alarm status (the high voltage battery low warning displayed in the instrument pack message centre) to 80%, it takes almost 40 minutes.		
Slow charging	Residential electricity	From alarm status (the high voltage battery low warning displayed in the instrument pack message centre) to 100% (the high voltage battery state of charge displayed in the instrument pack message centre), it takes almost 25 hours.	From alarm status (the high voltage battery low warning displayed in the instrument pack message centre) to 100% (the high voltage battery state of charge displayed in the instrument pack message centre) and equalisation, it takes almost 26 hours.	It takes approximately 28 hours to complete an equalisation charge for first use after the vehicle has been parked or stored for a long time.
	AC charging station	From alarm status (the high voltage battery low warning displayed in the instrument pack message centre) to 100% (the high voltage battery state of charge displayed in the instrument pack message centre), it takes almost 10.5 hours.	From alarm status (the high voltage battery low warning displayed in the instrument pack message centre) to 100% (the high voltage battery state of charge displayed in the instrument pack message centre) and equalisation, it takes almost 11.5 hours.	It takes approximately 13.5 hours to complete an equalisation charge for first use after the vehicle has been parked or stored for a long time.

Indicative Charging Times for Battery Pack Type 2

Note: These times are only a guide.

Rapid charging		From alarm status (the high voltage battery low warning displayed in the instrument pack message centre) to 80%, it takes almost 40 minutes.		
Slow charging	Residential electricity	From alarm status (the high voltage battery low warning displayed in the instrument pack message centre) to 100% (the high voltage battery state of charge displayed in the instrument pack message centre), it takes almost 16 hours.	From alarm status (the high voltage battery low warning displayed in the instrument pack message centre) to 100% (the high voltage battery state of charge displayed in the instrument pack message centre) and equalisation, it takes almost 17 hours.	It takes approximately 18 hours to complete an equalisation charge for first use after the vehicle has been parked or stored for a long time.
	AC charging station	From alarm status (the high voltage battery low warning displayed in the instrument pack message centre) to 100% (the high voltage battery state of charge displayed in the instrument pack message centre), it takes almost 8 hours.	From alarm status (the high voltage battery low warning displayed in the instrument pack message centre) to 100% (the high voltage battery state of charge displayed in the instrument pack message centre) and equalisation, it takes almost 8.5 hours.	It takes approximately 9 hours to complete an equalisation charge for first use after the vehicle has been parked or stored for a long time.

Discharging

The vehicle is equipped with a discharge function, this can covert the high voltage DC power in the high-voltage battery pack into domestic AC power.

This discharge function can be realized by using a discharge kit.

Note: Users have the opportunity to purchase the discharge kit from an MG Authorised Repairer.

To use the discharge function, follow the instructions below:

1 Unlock the vehicle and access the AC charging port (the charging port is also the discharging port).

2 Insert the discharge gun connector into the discharge port socket.

3 Access the discharger management interface in the entertainment display screen, ensure the cut-off power of discharge is set. After setting, click the start discharging button, the electronic lock will lock the discharge gun in place and the vehicle will enter the discharge state. At this time, do not attempt to remove the discharge gun using force, this will damage the locking mechanism.

4 The user is able to click the stop discharging button in the entertainment display screen to stop the discharge, or stop the discharge after the power is discharged to the set cut-off value. At this time the electronic lock will automatically be released and the discharge gun can be removed.

5 Make sure there is no debris or foreign matter in the charging port, fit the charging port cover and close the charging point door.

Note: After the vehicle starts discharging, if the entertainment display goes off, the vehicle will still maintain the discharging condition.

Note: During discharge, the START/STOP switch can be placed in the "ON" position to check the current power status and driving range of the high-voltage battery pack via the instrument cluster.

Note: During the discharge process, the user can still set the discharge power cut-off point.

Note: During discharge, the vehicle cannot be placed in "READY" mode.

Note: Using the discharge function will reduce the driving range of the vehicle.

IMPORTANT
• Before beginning the discharge operation, check the condition of the discharge connector and gun. • If it is necessary to use the discharge function on wet days, please pay particular attention in protecting the discharge port area and discharge gun from water, rain or snow. • In cases of abnormal phenomena such as peculiar smells, smoke emission or overheating etc during the discharge process, the electrical circuit MUST be disconnected immediately and the discharge operation stopped.

Electric Drive Transmission

Instructions

The following information is very important. Please read carefully before use:

- The electric drive transmission consists of a high voltage unit. DO NOT touch any drive components unless you have the correct training and qualifications.
- Before setting the vehicle power system to ON, close the door, make sure the vehicle is in P or N gear, apply the brake pedal and activate the EPB.
- When the vehicle power system is READY, the brake and EPB are still maintained, shift to the required gear.
- Switch off the EPB and maintain brake pedal application until you are ready to manoeuvre. On a flat road, once the brake pedal is released, the vehicle may automatically start moving slowly without applying the accelerator pedal.

Gear Shift Control

DO NOT press the shift control knob whilst driving .

When the vehicle is in motion, it is prohibited to switch from D gear to R gear or P gear, it may cause serious damage to the electric drive transmission or cause an accident.

The shift control knob is in the intermediate steady state position, and there are two unsteady positions clockwise and counterclockwise, that is, the shift control knob will return to the intermediate steady state position once released.

- P Park

  When the shift control knob is in this position, the electronic parking brake has been applied. Only select this gear when the vehicle is stationary.

  Note: The electronic parking brake system must be released via the EPB switch. See "Electronic Parking Brake (EPB)" under the "Brake System" section.

  Note: If the electronic parking system fails to activate, the vehicle will enable the parking function of the electric drive transmission, the P gear indicator on the shift control knob will flash. Operating the shift control knob to select any other gear will exit Park.

  The shift control knob can be pressed to select and engage P.

  If the START/STOP Switch is operated to power the vehicle OFF, P will automatically be selected and engaged.

  If the brake pedal is released, the driver seat belt is unfastened and the driver door is open, P will automatically be selected and engaged.

- R Reverse

  Select this gear only when the vehicle is stationary and you wish to drive backwards.

  Apply the brake pedal, turn the shift control knob counterclockwise to the end and release. The spring loaded shift control knob will return to a central position and the vehicle will enter Reverse.

- N Neutral

  Select this gear when the vehicle is stationary (for example, waiting for traffic lights).

  When in Park, apply the brake pedal, turn the shift control knob clockwise or counterclockwise to the first non-steady state position and release. The spring loaded shift control knob will return to a central position and the vehicle will enter Neutral.

  In Reverse, turn the shift control knob clockwise to the first non-steady state position and release. The

spring loaded shift control knob will return to a central position and the vehicle will enter Neutral.

Whilst D is selected, turn the shift control knob counterclockwise to the first non-steady state position and release. The spring loaded shift control knob will return to a central position and the vehicle will enter Neutral.

- D Drive

This is used for normal driving.

Whilst in Park, apply the brake pedal, turn the shift control knob clockwise to the end and release. The spring loaded shift control knob will return to a central position and the vehicle will enter Drive.

In R or N, turn the shift control knob clockwise to the end and release. The spring loaded shift control knob will return to a central position and the vehicle will enter Drive.

When the vehicle is stationary and has remained in Neutral for more than 2 seconds. Please apply the brake pedal, turn the shift control knob clockwise to the end and release. The spring loaded shift control knob will return to a central position and the vehicle will enter Drive.

For safety reasons ALWAYS apply the brake pedal when shifting between R and D positions.

Driving on Hills

In cases where a short stop on a hill is required, such as a traffic jam, DO NOT frequently apply the accelerator pedal to prevent a " roll back". This could cause the electric drive transmission to overheat or even system damage.

Hill Start

In cases of a hill start, the start assist function of the electronic parking brake (EPB) can be used to prevent the vehicle from rolling backwards. For details on this function, please refer to "Electronic Parking Brake (EPB)" in the "Brake System" section.

Models equipped with Hill Hold Control can use this function to assist hill starts. For details on the hill hold control system, please refer to "Hill Hold Control" in "Brake System" section.

Note: The aid of these functions cannot defy the laws of physics. DO NOT drive the vehicle beyond its physical limitations. Loss of control will still occur.

Driving Mode

Please avoid switching between Driving Modes while driving. This may divert the driver's attention away from road conditions and cause an accident.

In each of the different driving modes, the control system uses different control strategies for output control.

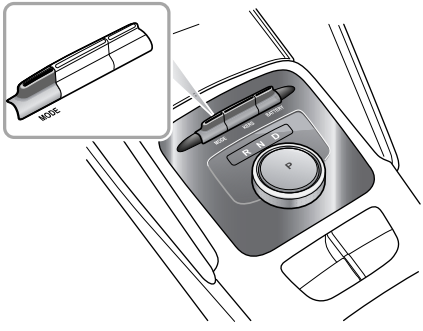

The driver can select three driving modes by operating the MODE switch:

1 ECO Mode

The vehicle is in the state of low energy consumption, which is used for energy-saving driving.

2 NORMAL Mode

The vehicle is balanced for daily driving.

3 SPORT Mode

Sport Mode concentrates on providing more power to enhance the performance.

Constant use of Sport Mode will increase energy consumption.

It is recommended to choose the Sport Mode when driving on special road conditions such as mountain roads .

When the driving mode is switched, the message centre will display: ECO , NORMAL, SPORT.

Selecting different driving modes will also automatically select the settings of other systems such as electronic steering and A/C - please see the chart below:

Driving Mode	Power Mode	Steering Mode	A/C Mode
ECO	Eco	Urban	Eco
NORMAL	Normal	Normal	Normal
SPORT	Sport	Dynamic	Sport

Note: While ECO Mode is selected, the A/C will operate in a low energy consumption state to provide an increase in vehicle power.

Energy Regeneration

Deceleration caused by energy regeneration is NOT a substitute for braking safely. The driver must ALWAYS be prepared to make braking manoeuvres to maintain safe driving.

When the vehicle is in a braking, over-run or coasting state, the energy regeneration function is activated, and the motor converts part of the kinetic energy of the vehicle into electric energy, which is then stored in the high voltage battery pack.

Energy cannot be regenerated or is limited under some conditions, such as:

- N gear is selected (During driving do not coast in N gear) ;
- During torque intervention (SCS or traction control operation) ;
- High voltage battery pack is fully charged;
- High voltage battery pack temperature is too high or too low.

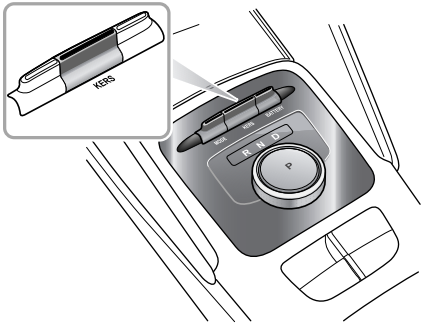

The driver can select three energy regeneration levels by operating the KERS switch :

1 Heavy

Heavy Level: Maximum energy is regenerated, the vehicle exhibits shorter coasting distances and a strong sensation of over-run drag or motor braking. The message centre displays ③ .

2 Moderate

Moderate Level: Moderate energy regenerated. The message centre displays ② .

3 Light

Light Level: Minimum energy is regenerated, the vehicle exhibits longer coasting distances and no significant sensation of over-run drag or motor braking. The message centre displays ① .

Note: It is recommended to choose Light or Moderate levels on surfaces that have low adhesion levels (e.g. icy roads).

Energy Management

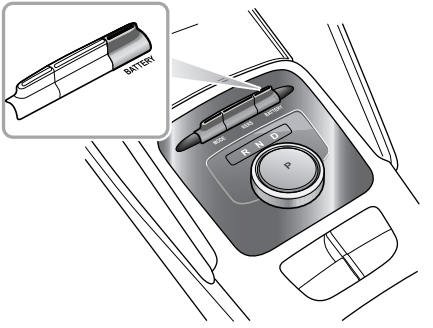

The driver can operate the BATTERY switch to display the energy management interface in the infotainment system.

Protection Mode

When parking the vehicle, please ensure the vehicle is parked safely and that all traffic by-laws are observed.

Motor Overheating Protection for the Electric Drive Transmission

The electric drive transmission may become very hot in a high-temperature environment with frequent starting, frequent rapid acceleration and deceleration, long-term continuous steep climbing, and overload of the electric drive transmission. In order to prevent damage to the motor, the system will perform an overheating protection function, the warning message "Motor Overheating" displays.

In this case, park your vehicle safely or, while keeping a low load, continue to drive your vehicle at a constant speed to cool the motor. Only when the motor temperature has decreased, and the warning message disappears, can the vehicle be driven normally.

If the electric drive transmission has cooled down for a long time (about 20 minutes) and the warning message has not disappeared, please park the vehicle safely and seek an MG Authorised Repairer immediately. Otherwise it may seriously damage the electric drive transmission.

IMPORTANT
When the motor of the electric drive transmission is under overheating protection, in order to avoid damage to the motor, the power of the vehicle will be limited (the message centre will display "Power Limited, Limiting Speed", and warning indicator will illuminate). After decelerating, the warnings will disappear when the motor temperature returns to normal.

Motor Fault of Electric Drive Transmission

If a fault or failure is detected in the motor or the power electronic box of electric drive transmission, the warning message "Motor Fault, Consult Handbook" will display simultaneously. Please seek an MG Authorised Repairer immediately.

Parking System Fault of Electric Drive Transmission

If a fault or failure is detected in the electrical park motor control unit, the warning indicator will illuminate, and the warning message "Parking System Fault, Consult Handbook" will display simultaneously. After a few seconds, the warning message will disappear but the warning indicator will remain on, please seek an MG Authorised Repairer immediately.

Electric Drive Transmission Fault

In some cases, when a fault or failure is detected, the warning indicator will illuminate in yellow or red according to different faults, and the warning message "Vehicle Control System Fault, Please ask Serving Station for Help!" or "Vehicle Control System Fault, Please drive carefully!" will display simultaneously. After a few seconds, the warning message will disappear but the warning indicator will remain on.

In some cases, the electric drive transmission will enter Limp Mode and will only function at certain speeds, please seek an MG Authorised Repairer immediately.

Severe Functional Malfunction

In some cases, when a fault or severe failure is detected in the electric drive transmission, the warning indicator will illuminate in red, and the warning message "Vehicle Control System Fault, Please Stop Safely!" will display simultaneously. After a few seconds, the warning message will disappear but the warning indicator will remain on. To protect the electric drive transmission, the power system will isolate the power transmission, and the vehicle will not be able to be driven, please seek an MG Authorised Repairer immediately.

In some cases, when a fault or severe failure is detected in the gear shift system, the message centre will display "EP". For safety reasons, if the vehicle speed is below a preset speed, the power system will isolate the power transmission, and the vehicle will not be able to be driven, please seek an MG Authorised Repairer immediately.

Brake System

Overview

This series of models are equipped with hydraulic brake system, vacuum servo assisted, braking through dual circuits, and various functions are realized by brake control module.

The brake system can be divided into service brake system and parking brake system which includes Electronic Brake Force Distribution (EBD) and Electronic Brake Assistance (EBA). EBD system can distribute braking forces between front and rear wheels under all load conditions in order to maintain braking efficiency. EBA system can react to the speed at which the brake pedal is applied. Full ABS application is applied to bring the vehicle to a stop in the shortest possible distance if the brakes are applied faster than the limits set within the system in an emergency situation.

Driving through water or heavy rain may adversely affect braking efficiency. The SCS (Stability Control System) includes a Brake Disc Wiping function which is activated when the windscreen wipers are used. However, always keep a safe distance from other vehicles and intermittently apply the brake pedal in conditions where the wipers are not used.

The brake system is servo assisted, always be aware of the followings during the operation:

- The servo assistance function is reliant upon vacuum which works only when the START/STOP Switch is in ON/READY state. NEVER allow the vehicle to coast when the START/STOP Switch is in OFF state.
- The vacuum is provided by an electronic vacuum pump. DO NOT continually pump the brake pedal, otherwise the brake system may be unable to provide sufficient brake assist and the vehicle speed will be limited. If this situation does occur or is unavoidable, please pull over and allow the electronic vacuum pump to cool down for a while when it is safe to do so. Please power the vehicle again to return to normal.
- The efficiency of the brake servo booster can be affected by numerous conditions, such as change of atmospheric pressure due to altitude differences. These conditions could result in extra force being required to operate the brake pedal to stop the vehicle.

- If the braking efficiency is reduced due to vehicle failure, please contact an MG Authorised Repairer as soon as possible.

Parking Brake System-Electronic Parking Brake (EPB)

In the event of EPB malfunction where EPB release is not possible, please consult an MG Authorised Repairer in order to carry out an emergency manual release of the parking brake.

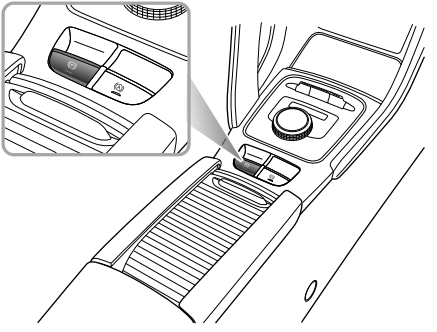

The EPB can be applied and released in two ways:

- Manual operation: When the vehicle is parked safely, pull the EPB switch upward to apply EPB. Ensure the START/STOP Switch is in ON/READY state, press the brake pedal, and press the EPB switch to release EPB.
- Automatic operation: When the vehicle is parked safely, selecting P on the shift control knob will automatically apply EPB. If the vehicle is stably parked on a flat road or a road with a small ramp, the START/STOP Switch is in READY state, press the brake pedal and turn the shift control knob from P to N, D or R, the EPB will automatically release.

The indicator in the EPB switch and the indicator Ⓟ in the instrument pack illuminate, indicating that the EPB is applied. The indicator in the EPB switch and the indicator Ⓟ in the instrument pack extinguish, indicating that the EPB is released.

Note: Always apply EPB before leaving the vehicle.

Note: An audible motor noise may be heard when applying or releasing EPB.

Note: If the vehicle is on a steep slope, turning the shift control knob from P to N, D or R will not automatically release EPB. In this case, manually release EPB or apply the Start Assist function of the EPB to release EPB.

IMPORTANT
• DO NOT leave the vehicle before the indicator in the EPB switch illuminates and the gear indicator displays P. The vehicle may not be safely parked due to EPB failure, resulting in sliding. • The EPB cannot be applied or released in the event of a flat battery or power failure. If using 'jump leads' to temporarily supply power please see 'Emergency Starting' in the Emergency Information.

Start Assist

If the driver's seat belt is fastened, the START/STOP Switch is in READY state, D or R gear is selected and the accelerator pedal is pressed in order to pull away, the EPB will automatically release.

Emergency Braking Function

Inappropriate use of EPB can lead to accidents and injuries. DO NOT apply EPB for vehicle braking unless in emergency.

During emergency braking using the EPB, DO NOT switch the START/STOP Switch to the OFF state, otherwise serious injury will be caused.

In the event of normal brake failure, emergency braking can be realised by pulling and holding the EPB switch upward. In the process of emergency braking, an audible warning will sound at the same time. To cancel the emergency braking process, release the EPB switch.

Service Brake System

Anti-lock Brake System (ABS)

When travelling at high speed or there is a danger of aquaplaning, i.e. where a layer of water prevents adequate contact between the tyres and the road surface, ABS cannot overcome the physical limitations of stopping the vehicle in a short distance. In these cases, it is the responsibility of the driver to maintain a safe distance from other vehicles.

DO NOT pump the brake pedal at any time, this will interrupt the operation of ABS and may increase the braking distance.

The main function of ABS is to adjust the braking force of the brake caliper automatically during braking to prevent wheel locking, so as to avoid dangerous situations such as out of control of direction or vehicle sideslip during emergency braking.

The system enables the driver to maintain the control of vehicle steering in case of emergency braking, keeps the vehicle stable and improves safety.

Under normal braking conditions, ABS will not be activated. However, once the braking force exceeds the available adhesion between the tyres and the road surface, thereby causing the wheels to lock, ABS will automatically come into operation. This will be recognisable by a rapid pulsation felt through the brake pedal.

If an emergency situation occurs, the driver should apply full braking effort to activate ABS even when the road surface is slippery.

Note: On soft surfaces such as powdery snow, sand or gravel, vehicles equipped with ABS may have a braking distance greater than those without ABS. This is because the natural action of locked wheels on soft surfaces is to build up a wedge of material in front of (or to the side of, if steering) the tyre contact patch. This effect assists the vehicle to stop when braking or to change direction when steering.

IMPORTANT
Although ABS can greatly improve the safety of driving, the real safety still depends on the standardized driving behavior of the driver.

Stability Control System (SCS) and Traction Control System (TCS)

SCS is designed to assist the driver in control of driving direction. When SCS detects that the vehicle is not moving in the intended direction, it will intervene by applying brake force to selected wheels or through the power system management system to prevent sliding and assist in bringing the vehicle back to the right direction.

TCS is designed to aid traction, thereby helping the driver to maintain control of the vehicle in situations where one or both of the driving wheels are spinning (for example, if one wheel is on ice and the other on tarmac). TCS monitors the driving speed of each wheel individually. If spin is detected on one wheel, the system will automatically brake that wheel, transferring torque to the opposite, non-spinning wheel. If both wheels are spinning, the system will reduce motor power in order to regulate wheel rotation until traction is regained.

SCS and TCS are automatically switched to standby when the START/STOP Switch is in ON/READY state, they can be switched off by using the switch located within the infotainment system when the START/STOP Switch is in READY state.

Note: Disabling SCS and TCS will not affect the operation of ABS. Always disable SCS and TCS when driving with snow chains fitted.

Auto Hold

The Auto Hold function cannot guarantee the stability of the vehicle when starting off or braking on hills especially on slippery or icy surfaces.

When Auto Hold stops the vehicle, for reasons such as power system shutdown, releasing the seat belt or pressing the Auto Hold switch, the EPB will be applied. But it cannot be guaranteed that the vehicle will be stabilised in all cases. For example, the rear wheels are on a slippery road surface, or the vehicle incline is too great. Please make sure that the vehicle is safely stabilised prior to exiting.

The driver should pay full attention and observe the surroundings even if the vehicle is equipped with Auto Hold system.

Auto Hold cannot guarantee the EPB applied in all cases when the power system is shut down. Please ensure the EPB is applied and the vehicle is stabilised prior to exiting the vehicle.

The Auto Hold function should be switched off during the use of automatic car washes, otherwise the EPB may suddenly apply and cause vehicle damage.

If the vehicle needs to stop frequently for a length of time (such as waiting in front of traffic lights, stopping on a ramp, or following the traffic flow), the Auto Hold system assists in stabilising the vehicle, enabling you to remove your foot from the brake pedal.

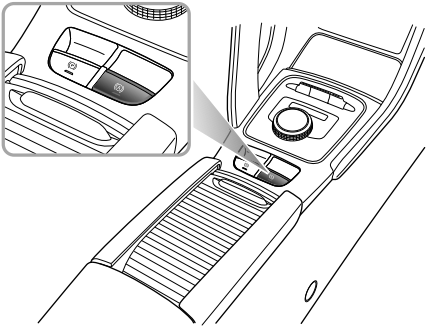

Auto Hold has 3 main states:

1 Standby:

With the driver's seat belt fastened, the driver's door closed and the power system running, press the Auto Hold switch to switch the function from Off to Standby state. The Auto Hold switch indicator lamp illuminates.

2 Parking:

With the brake pedal firmly pressed and the vehicle completely stopped, the Auto Hold function will switch from Standby state to Parking state. In this state the green indicator Ⓟ in the instrument pack illuminates.

When the Auto Hold is in the Parking state, select D or R gear, press the accelerator pedal, then the Auto Hold will automatically exit the parking state according to the gradient.

3 Off:

Press the Auto Hold switch again to turn the function off.

In some circumstances such as releasing the seat belt, switching off the power system, remaining static for a length of time or pressing the Auto Hold switch, it will result in exiting the Auto Hold Parking state. At this time the EPB will be applied.

Note: The EPB will NOT be applied when pressing the switch to turn the Auto Hold off with the brake pedal pressed.

Note: It is recommended to turn off the Auto Hold function when reversing into the garage.

Hill Hold Control (HHC)

HHC has limitations when subject to adverse conditions such as wet or icy surfaces and steep slopes.

DO NOT exit the vehicle with only HHC applied, it may lead to a serious accident when HHC releases.

Firm application of the brake pedal when stopping is required by HHC to generate sufficient brake pressure to maintain hold.

HHC assists the driver by 'holding' the vehicle during hill starts. If the driver releases the brake pedal, the HHC will hold the vehicle stationary for a short time.

The following conditions must be fulfilled to activate HHC:

- The driver's door is closed and the driver seat belt is fastened.
- The vehicle is stopped on a certain slope.
- SCS is fault free.
- EPB is fault free and released.
- START/STOP Switch is in READY state.

- D or R gear is selected.
- Sufficient brake pedal application force has been applied.

Note: HHC is available in both forward and backward directions when pulling away on uphill slopes.

Hill Descent Control (HDC)

The HDC system is only an auxiliary function. It has limitations when subject to adverse conditions such as wet or icy surfaces and steep slopes.

Even when the HDC system is in operating state, the driver must always pay close attention to the driving state of the vehicle, and take active control when necessary. In certain cases, the HDC system may be deactivated temporarily.

During some downhill driving conditions (e.g. going downhill at high speed or the slope of the ramp is small, etc.), the HDC system is inoperative, the driver must maintain control of the vehicle at all times and use brake applications to ensure safety.

The HDC system is an auxiliary function specially designed for driving on acute downhill gradients. The system reduces the speed by applying brake force to assist the driver drive down the steep slope smoothly.

Note: When the HDC system is working, the brake system will produce slight vibration or working noise, which is a normal phenomenon.

Note: When the HDC system is working, please do not move the shift control knob to 'N' position. Such operation may deactivate the HDC function.

When the START/STOP Switch is in the ON/READY state, the HDC system is off by default. Use the switch within the infotainment system to turn the HDC system on.

The HDC system has four states:

1 Standby:

Touch the HDC switch to set the system into standby state, the green HDC indicator lamp in the instrument pack will illuminate.

2 Operating:

When the vehicle drives into a steep slope at low speed and the driver does not press the brake and accelerator pedal, the system will automatically enter the operating state. In this case, the green HDC indicator lamp in the instrument pack flashes. At this time, it may be accompanied by the working noise of the brake system, and the vehicle will drive down the steep slope smoothly.

3 Temporary Deactivation:

By pressing the accelerator pedal or if the brake pedal is pressed beyond a certain limit whilst in operating state, the HDC system will temporarily suspend operation.

4 Off:

Touch the HDC switch again to switch the system off, the green HDC indicator lamp in the instrument pack will extinguish.

Note: If the vehicle undergoes sharp steering manoeuvres on certain gradients, the HDC system may change from the standby state to the operating state.

Note: During the HDC system operation, the brake system will automatically pressurise and maintain pressure. Operation of the brake pedal during this phase may result in a 'kickback' sensation through the pedal. This is a normal phenomenon.

Active Rollover Protection (ARP)

The ARP system is only a safety aid to assist the stability of the vehicle under extreme conditions and does not ensure that the vehicle will not roll over.

Rapid or excessive dual direction lane changing may create a roll condition in cases where the vehicle has a high centre of mass. ARP can use the brake system to apply certain brakes to correct the condition and assist in preventing rollover.

Note: During ARP application the steering characteristics of the vehicle may be noticeably different from normal.

Emergency Braking Hazard Warning Lights Control (HAZ)

The HAZ function can make the brake lamps flash automatically to alert the drivers behind if the driver applies emergency braking during driving.

Note: The HAZ function will not work if the hazard warning lamps are switched on manually.

The brake lamps will exit the flash state after a few seconds when the vehicle is no longer in emergency braking state (no severe deceleration detected).

Note: As the vehicle speed drops to below 10 km/h and the brake lamps no longer flash, the hazard warning lamps will illuminate automatically. Short press the hazard warning lamp switch or speed up the vehicle to more than 20 km/h for 5 seconds to switch off the hazard warning lamps.

Multi-Collision Brake System (MCB)

The MCB function will automatically apply the brake to reduce the vehicle speed and improve the vehicle stability after a collision. It is designed to reduce the risk of re-collision caused by the uncontrolled movement of the vehicle after a collision.

The MCB will be activated when the following conditions are all met at the same time:

- In case of vehicle collision, the seat belts or airbags are deployed.
- The vehicle speed is less than 60 km/h.

- The steering wheel has not been turned in excess of 180°.
- SCS is fault free.

The MCB function will not trigger if the driver strongly applies the accelerator pedal after a collision.

The vehicle will exit the braking state if the driver strongly applies the accelerator pedal after the MCB function is triggered.

Note: The MCB function cannot guarantee the deceleration of the vehicle in all cases of collision because the collision process may lead to malfunction or failure of some parts, thus affecting the normal operation of the function.

Adaptive Cruise Control System

The adaptive cruise control system is designed as a comfort system enabling the driver to maintain a constant speed or distance from the car in front. It provides assistance to the driver, it DOES NOT replace any of the drivers responsibilities. When using the adaptive cruise control system, it is important that the driver maintains concentration at ALL times and is prepared to take action. Otherwise, accidents or personal injuries may occur.

The adaptive cruise control system can automatically switch between constant speed cruise and car following cruise depending on whether it can detect a vehicle directly ahead. Constant speed cruise controls the vehicle within a certain speed range. Car following cruise operates by setting the distance between the vehicle and the vehicles directly ahead.

When activated if the adaptive cruise control system detects a vehicle in the same lane directly ahead it may accelerate or gently apply the brakes of the car to maintain the set following distance.

Note: The adaptive cruise control system is designed for highways and roads in good condition. It is recommended not to be used on urban roads and mountain roads.

Adaptive Cruise Control System Activation

After following the vehicle ahead to a stop, the driver must observe any local traffic laws and ensure that there are no obstacles or other traffic participants, such as pedestrians, directly in front of the vehicle before allowing it to pull away and begin to follow the vehicle ahead again.

Whilst using the car following cruise function it is strongly recommended that the driver does not touch the accelerator pedal. Any activation of the accelerator will not allow the system to automatically apply the brakes should this be necessary.

DO NOT exit the vehicle when the adaptive cruise control system car following cruise function has stopped the car, or is keeping the car stationary. Before exiting the car the shift control knob should be in the Park position and the START/STOP Switch in the OFF position.

If the adaptive cruise control system has already stopped the vehicle, and the adaptive cruise control function is disabled, turned off or cancelled, the vehicle will no longer stay still, it may move forward or slip backward. When the vehicle is stopped and kept still by the adaptive cruise control system, be sure to be ready to apply the brakes manually.

When driving on a bend, the adaptive cruise control may actively reduce the vehicle speed to maintain vehicle stability and safety.

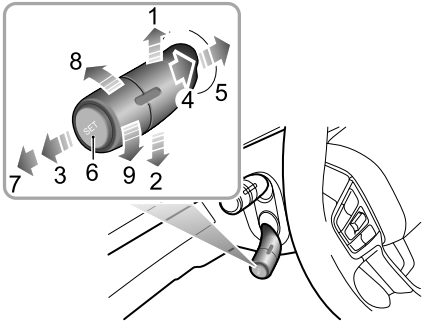

1 Speed Limit Increase/Accelerate

2 Speed Limit Decrease/Decelerate

3 Cancel

4 Standby

5 Resume

6 Set

7 OFF

8 Increase Distance

9 Decrease Distance

The adaptive cruise control system is operated with a lever switch, which is located, at the left side of the steering wheel underneath the indicator/lighting stalk switch.

1 With the vehicle START/STOP Switch in the ON/READY position, if the adaptive cruise lever switch is in the 'OFF' position (7), then the adaptive cruise control system is switched OFF.

2 Move the adaptive cruise lever switch to the 'ON' position (4), the adaptive cruise system status indicator on the instrument pack illuminates yellow, the adaptive cruise control system is in the Standby mode.

3 The system will automatically detect the speed and position of the vehicle ahead, if your vehicle speed is above 3mph (5 km/h) , after pressing the 'Set' button (6) at the end of the adaptive cruise stalk lever, the indicator on the instrument pack will turn green, and the adaptive cruise control system enters the Activated mode, its target speed is the actual speed at activation; if your vehicle speed is less than 20mph (30 km/h) , then the target speed of the system is set at 20mph (30 km/h) . If the speed of the vehicle ahead is greater than the cruise target speed of your vehicle, your vehicle will maintain the target speed to conduct constant speed cruise. If the speed of the vehicle ahead is lower than the cruise target speed of your vehicle, it will enter the car-following cruise. An image of your car and the car ahead is displayed in the instrument pack message centre. In this mode the actual speed may be less than the set target speed. Whilst in the car following cruise mode, you can follow the vehicle ahead to a stop. If the parking time is less than a preset time period, your vehicle may automatically pull away to follow the vehicle ahead, or you need re-activate the adaptive cruise control system using the method displayed.

Note: Manual deactivation of either the Traction Control System (TCS) or Stability Control System (SCS) will inhibit the operation of the adaptive cruise control system.

Adaptive Cruise Target Speed Adjustment

When the adaptive cruise control system is activated:

1 Use the accelerator pedal to reach the desired speed, short press the 'Set' button (6) on the end of the adaptive cruise switch lever, release the control button and accelerator pedal. The vehicle will cruise at the desired speed.

2 Move the lever switch upward (1) and hold, the target speed will increase until the desired set speed appears in the instrument pack, then release the switch. When it is confirmed that there is no vehicle in front of your vehicle or the vehicle ahead exceeds the preselected following distance, the speed will be increased to the set speed.

3 Move the lever switch downward (2) and hold, the target speed will decrease until the desired set speed appears in the instrument pack, then release the switch, the vehicle speed will decrease to the set speed.

4 When using the lever to adjust the target speed, briefly operate the adaptive cruise lever switch upward (1) or downward (2) once, the target speed will change 5mph (5 km/h) , press and hold the lever upward or downward and the speed will increase or decrease in 1mph (1 km/h) increments, release the lever when the desired speed reading is displayed.

Note: If the vehicle ahead continually makes hard acceleration or deceleration manoeuvres the adaptive cruise control may not be able accurately maintain the required distance between vehicles. It is important that the driver always concentrates and pay attention to the current vehicle position and situation in case they need to make a braking or avoidance manoeuvre.

Adaptive Cruise Target Following Distance Adjustment

When the adaptive cruise control system is activated, rotate the switch on the end of the lever upward (8) or downward (9) to adjust the following distance, you are able to toggle between 3 distance settings which are displayed in the message centre in the instrument pack.

Always select an appropriate following distance that is relative to the current speed of your vehicle and the vehicle you are following, the greater the speed, the further the distance. ALWAYS consider current traffic, road and weather conditions when making your selection.

Adaptive Cruise Pause/Standby

When the adaptive cruise control system is activated, move the lever switch to the 'Cancel' position (3), and the system will exit to the Standby mode.

Automatic Deactivation of Adaptive Cruise

In the following situations, the adaptive cruise control system may be automatically deactivated, this transfers full control of the vehicle to the driver.

- Move the lever switch to 'OFF' position (7).
- Press the brake pedal whilst the vehicle is in motion.
- Move the rotary gear knob to either R or N position.
- The driver unfastens his/her seat belt.
- Press and hold the accelerator pedal beyond a preset time period.
- Open any door, bonnet or tailgate.
- Pull the EPB switch up to apply the parking brake.
- Follow the vehicle ahead to a stop and the stop time exceeds a certain period of time.
- The camera or radar view is blocked, the surrounding environment triggers the preset safe exit mechanism of the sensors, or the system fails.

Note: If following the vehicle ahead to a stop with the adaptive cruise control system enabled, if any of the following conditions occur whilst the vehicle is in a stopped state, the EPB will automatically be applied:

- ***The driver unfastens his/her seat belt.***
- ***The driver door is opened.***
- ***The stationary time exceeds the preset time period.***

Adaptive Cruise Override

If the driver has cause to use the accelerator pedal when the adaptive cruise control system is activated, the vehicle will remain in Cruise mode while the vehicle speed increases. When the accelerator pedal is released, the adaptive cruise control system will resume to operate at previously set cruise speed.

Adaptive Cruise Resume

If the adaptive cruise control system has reverted to, or been switched to, the Standby mode it can be reactivated by moving the lever switch to the 'Resume' position (5). The target cruise speed will automatically be set to the target speed before exiting the adaptive cruise control system.

Clear Speed Memory

If the lever switch is moved to the 'OFF' position (7) or the vehicle START/STOP Switch is switched to the OFF position, the system may clear the adaptive cruise control set speed in the memory.

Adaptive Cruise Control System Impairment and Ineffectiveness

- Encounters a vehicle or object which is stationary or traversing the lanes.
- Approaching the vehicle ahead too fast, and the system cannot apply sufficient braking force.
- The vehicle ahead is an oncoming vehicle, or makes an emergency braking manoeuvre.
- A vehicle suddenly cuts into the lane in front.
- Encounters a vehicle driving at a low speed.
- Encounters a vehicle with loaded items protruding from the body profile of the vehicle.
- Encounters a vehicle with a higher chassis (e.g., a truck).
- Encounters pedestrians, non-motor vehicles or animals.
- The vehicle is driving on an uneven road or a complex traffic road section.
- The vehicle makes a sharp turn.
- Enters and leaves a tunnel or drives in the tunnel.
- Drives in the shade of mottled trees.
- Excessive weight being carried in the boot space or cargo area causing the front of the car to point upwards.

Special Driving Environments

The adaptive cruise control system has it's limitations. Listed below are some conditions that may be beyond the safe operating limits. The driver should maintain control of the vehicle and must remain alert at all times. They should pay special attention to the traffic conditions and surroundings, select the appropriate speed and be ready to take any required actions.

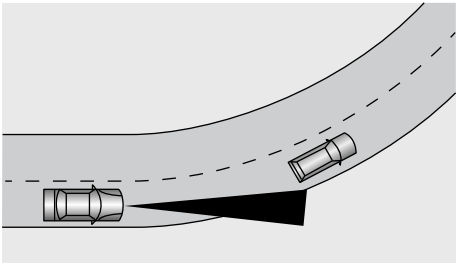

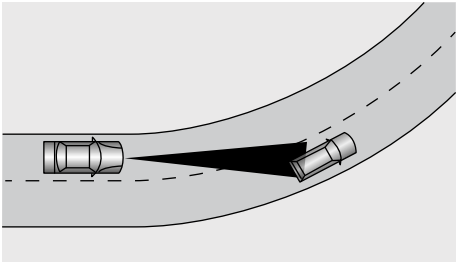

When turning at an intersection or following a vehicle into, or out of a curve, the adaptive cruise control system may be unable to detect the vehicle ahead, even if it is in the same lane, it is possible the system may detect a vehicle in another lane.

Note: Do not use the adaptive cruise control system on entrance/exit ramps or sharp bends.

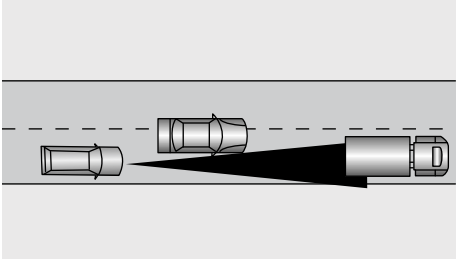

If the vehicle ahead changes lanes, but does not drive into the lane completely, the adaptive cruise control system may be unable to detect the vehicle.

If the vehicle ahead changes lanes, but does not exit the lane completely, the adaptive cruise control system may

determine that the vehicle ahead has exited the lane and accelerate to any preset speed.

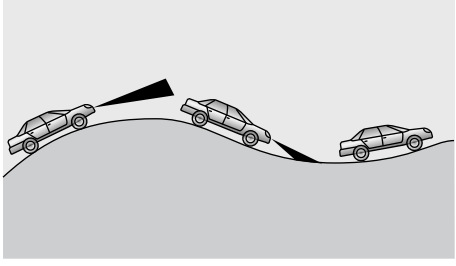

When driving on uneven roads that may include steep climbs or dips please DO NOT use the adaptive cruise control system.

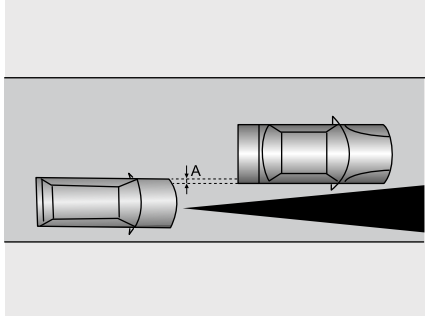

When driving behind a vehicle that is only partially overlapping your vehicle, 'A' in the graphic, the adaptive cruise control system may be unable to detect anything.

Note: Please DO NOT use the adaptive cruise control system in the following situations:

- ***Driving in bad weather conditions.***
- ***When the ambient light is insufficient, the light is too bright, or the forward lighting of the vehicle is poor.***

- ***Driving on rough or poor road surfaces.***
- ***Driving through roadworks or construction sites.***
- ***Driving on low friction roads.***

Parking Aid System

Ultrasonic Sensor Parking Aid

The purpose of the parking aid is to assist the driver in reversing! The sensors may not be able to detect obstacles of certain type, e.g. narrow posts or small objects no more than a few inches wide, small objects close to the ground, objects above the tailgate and some objects with non-reflective surfaces.

Keep the sensors free from dirt, ice and snow. If deposits build up on the surface of the sensors, their performance may be impaired. When washing the car, avoid aiming high pressure water jets directly at the sensors from close range.

Rear Parking Aid

The ultrasonic sensors in the rear bumper monitor the area behind the vehicle to search for obstacles. If any obstacle is detected, the system will calculate its distance from the rear of the vehicle and communicates the message to the driver by sounding warning chimes.

Parking Aid in Operation

The rear parking aid is enabled automatically when reverse is selected, it is switched off as soon as reverse is disengaged. A short beep is given by the parking aid within 1 second after selecting reverse to indicate that the system is operating normally.

The entertainment system screen will display a silhouette image of the car showing the object distance values for the sensor.

Note: If a longer, higher pitched sound is emitted for 3 seconds when reverse is selected this indicates a fault in the system. In this case seek assistance from your MG Authorised Repairer.

With the parking aid enabled, when obstacles are detected, the system will give sounds in different frequencies (there might be blind areas).

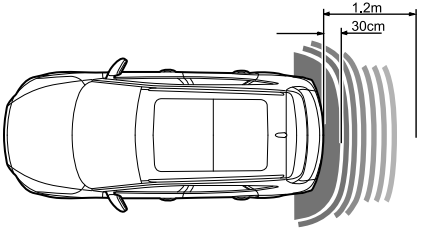

- If there is an obstacle within 1.2m range from the rear sensors, the system starts to emit a beeping sound. As the vehicle moves closer to the obstacle, the beeps are transmitted more rapidly.
- Once the obstruction is within 30cm range of the rear bumper, the beeps will merge into a continuous warning.

Note: If turning on towing mode through the entertainment display, the system function is temporarily unavailable.

360 Around View System

The purpose of the 360 around view system is to assist the driver during parking, The cameras have a limited field of vision and cannot detect obstructions outside the field of vision.

Although the entertainment display can provide images around the vehicle, please still pay attention to the current actual road conditions for your driving safety.

Please ensure that the exterior rearview mirrors are unfolded when using the 360 around view system.

With the 360 around view system activated, the entertainment display will display the 360 degree panoramic image of the vehicle to facilitate the observation of the surrounding environment in order to assist with safer driving. Buttons on the entertainment display can be touched to view the images from different angles around the vehicle.

The 360 around view system can be enabled using the following methods:

- Selecting Reverse gear.
- Operating the 360 button.
- Using the 'Setting' interface to select low speed switching of corner lights/indicators, this will automatically open the 360 around view system when the indicators are used at low speeds and exit when the indicators are cancelled.

In the 360 around view system display interface, select the settings icon to enable personal settings for system functions.

Note: When the shift lever is placed in a forward gear position, the 360 around view system is inhibited at speeds above or equal to 10mph (15km/h).

Rear Driver Assistance System *

System Overview

The rear driver assistance sensors may misidentify some surroundings, such as roadside buildings or guardrails and provide a false alarm.

The effective recognition capabilities of the rear sensors can be limited by objects such as roadside buildings, guardrails, changes in pitch angle of the car due to heavy loading, road conditions such as bends or bumps or weather conditions such as snow and ice etc. Any of the above may trigger a false alarm.

The system has limitations and may not be able to warn of vehicles approaching at high speeds.

The rear driver assistance function is only an aide, it is NOT a substitute for the attention of the driver. The driver must always remain in control, observe the surroundings and drive safely.

The rear driver assist system may not provide adequate warning of very fast approaching vehicles or operate correctly on tight curves of 500m radius or less.

The rear driver assist system will not operate correctly whilst towing a trailer or caravan.

The correct operation of the rear sensors will be compromised if they are misaligned due to accident damage. This may cause the system to automatically shutdown.

To ensure that the radar sensors work correctly, the rear bumper should be kept free of snow and ice and must not be covered.

Use of non recommended materials or paint on rear bumper repairs may have a detrimental effect on the operation of the rear sensors. Please only use recommended materials.

The rear driver assistance system includes blind spot detection (BSD), lane change assist (LCA), and rear cross traffic alert (RCTA) functions.

The rear driver assistance modules are mounted at the rear of the vehicle on each side, they can assist in detecting vehicles behind or to the side of your vehicle.

The warning lamps to support this system are located within the LH and RH door mirror glasses, they will illuminate or flash to warn of an approaching object or car to assist you in manoeuvring the car safely.

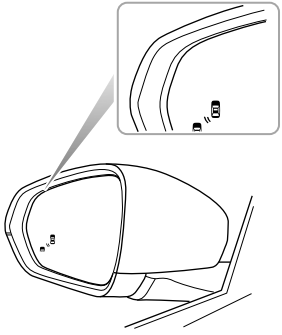

Note: The radar requires calibration on new vehicles or for vehicles of where a rear detecting radar sensor has been replaced. The rear detection radar sensors possess an automatic calibration function to compensate for installation error within a certain range. When the vehicle is running, the radar will automatically enter the calibration state. During the calibration process, the system will provide limited functions, and the alarm may be inaccurate. Upon

completion of the calibration, the system will resume all functions.

Switching the System Functions On/Off

The rear driver assist system function and sub system switches can be accessed via the infotainment screen.

Select ON/OFF to activate/deactivate the system.

Note: If turning on towing mode through the entertainment display, the system function is temporarily unavailable.

System Functions

Note: The detection area, collision time threshold value and vehicle speed provided in the system function description are just for your reference.

Blind Spot Detection (BSD)

When the vehicle is driving forward, the system will monitor the motor vehicles located in the blind zones of the left and right exterior mirrors. When the conditions for activating the blind spot detection function are met, the warning lamps in the corresponding mirror will illuminate. Subsequent operation of the relevant indicator will cause the warning lamp in the mirror to flash to remind the driver of an approaching vehicle.

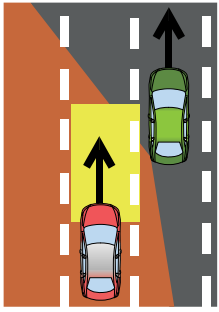

The conditions for activating the blind spot detection function include:

1 No faults are present in the system.

2 Blind spot detection (BSD) function is enabled.

3 The vehicle speed is above 10mph (15km/h).

4 There are motor vehicles in the blind zone of the vehicle. The left and right areas, which are 1m ahead and 7m behind the rear of the vehicle, and 3.5m to the side of the vehicle are the system detection areas.

Note: The warning lamps will not illuminate whilst you are overtaking another vehicle and your speed is greater than that of the vehicle you are passing, even though it is in the blind zone.

Lane Change Assist (LCA)

When the vehicle is driving forward, the system will monitor the motor vehicles approaching rapidly in the adjacent lanes. When the indicators are activated, and the conditions for activating the lane change assist function are met, the system will flash the warning lamp within the respective mirror to warn the driver of an approaching vehicle. This aims to help avoid collisions when changing lanes.

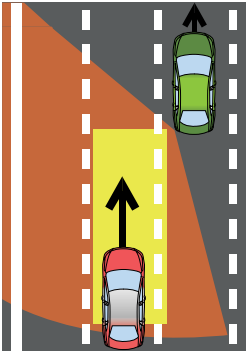

The conditions for activating the lane change assist function include:

1. No faults are present in the system.
2. Lane change assist (LCA) function is enabled.
3. The vehicle speed is above 10mph (15km/h).
4. The speed of the approaching vehicle is higher than the speed of your vehicle.
5. The approaching vehicle enters the detection area of the lane change assistance, the monitored areas are 7m - 70m behind your vehicle and 3.5m to the side of your vehicle.
6. The approaching vehicle is likely to have a collision with your vehicle within 3.5 seconds.

Rear Cross Traffic Alert (RCTA)

When the vehicle is reversing, the system will monitor vehicles approaching from the left and right rear. When the conditions for activating RCTA function are met, the warning lamps in the mirrors on the corresponding side will illuminate, simultaneously a warning triangle icon for the corresponding side will be displayed in the infotainment screen to alert the driver to the situation.

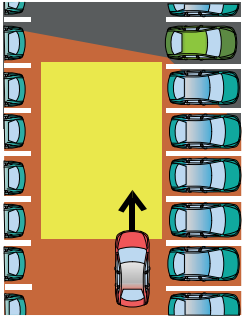

The conditions for activating the rear cross traffic alert function include:

1 No faults are present in the system.

2 Rear cross traffic alert (RCTA) function is enabled.

3 The vehicle is in Reverse gear.

4 The vehicle speed is less than 6mph (10km/h).

5 The speed of the vehicle being monitored is above 6mph (10km/h).

6 The motor vehicle drives across the system detection area. The areas monitored to the left and right of the vehicle are 7m behind the rear of the vehicle, and 30m from the side.

7 The approaching vehicle is likely to have a collision with your vehicle within 3 seconds.

Tyre Pressure Monitoring System (TPMS)

TPMS can not replace routine maintenance and checks of tyre condition and pressures.

Using equipment that transmits on frequencies similar to that of the TPMS may interfere with the operation of the Tyre Pressure Monitoring System, this may illuminate a warning or register a temporary fault.

TPMS uses pressure sensors built into tyre valves to continuously monitor pressure and transmit data to the ECU inside the vehicle using RF signals. If it deduces that the pressure of that tyre has fallen below the predefined limit of the system, the warning light in the instrument pack will illuminate (always yellow). For more information, please refer to 'Instrument Pack' in 'Instruments and Controls' section. TPMS can remind you of low tyre pressure, but it can not replace normal tyre maintenance. For tyre maintenance, please refer to 'Tyres' in 'Maintenance' chapter.

Note: TPMS only warns of low tyre pressures, it does not re-inflate the tyre.

If the TPMS malfunction indicator lamp illuminates, and the warning message "XX Tyre Pressure Low" is displayed, it is advised that you please stop the car as soon as possible, check the tyre pressure and inflate the tyre to correct pressure value. The tyre pressure label attached to the the vehicle indicates the standard pressure required for your vehicle's tyres when the tyres are cold.

Driving with under-inflated tyres may overheat and cause tyre fault. Over or under-inflated tyres wear out more rapidly and also have a detrimental effect on the car's handling characteristics. Under-inflated tyres increase the rolling resistance of the car which, in turn, increases power consumption. Always check/adjust tyre pressures when they are cold.

Note: After changing the tyre position or replacing a TPMS sensor and receiver, the vehicle needs to run at a speed of 40km/h for about 10 minutes to correctly

indicate the tyre pressure value at the corresponding position.

Driving Assist System

Under certain conditions the driving assist system can detect the road and environmental information ahead of the vehicle by utilising a front view camera and a front detection radar. This information is used to relay warning messages or provide assistance to help the driver in controlling the vehicle in a safer and more reliable manner. The front view camera is located in the interior rearview mirror base cover, the front detection radar is located at the lower middle of the front bumper.

Note: DO NOT operate any infotainment switches whilst driving. If you wish to make any settings changes, please pull over when it is safe and legal to do so.

Description of Front View Camera

Calibration of front view camera

The front view camera will require re-calibration after any of the following operations:

- Removal and refitting of the front view camera.
- Replacement of the windscreen.

Note: The calibration of front view camera requires professional knowledge and tools. If calibration is required, please seek an MG Authorised Repairer.

Obstruction of the front view camera

On occasion the front view camera view may become obstructed by foreign objects or stains on the glass. In these cases a prompt message will appear in the information centre. Please wipe or clean immediately.

In the following situations, the detection performance of front view camera will be affected:

- Driving in poor weather conditions where visibility is reduced due to thick fog, heavy rain, snow, dust or sand storm etc.
- Affected by light, for example low light levels at night, poor auxiliary lighting, excessive backlighting in the view, light from oncoming vehicles, abrupt change of brightness with a quick bright/dark jump (tunnel entrance/exit), driving on surfaces with strong reflective

properties (road surface covered with water or snow), tunnels, inside a building etc.

- The front view camera view is partially or fully blocked by obstacles, e.g. dust, foreign objects, oil pollution, mud, snow, excessive water (rain), frost or water spray from the road on the windscreen.
- The windscreen viewing area is damaged.
- Not calibrated after removing/refitting the front view camera or the windscreen.
- The front view camera is not secured in place.

Description of Front Detection Radar

Calibration of front detection radar

The front detection radar re-calibration is required after any of the following:

- The front detection radar mis-alignment failure, for example the position of the front detection radar has changed.
- Remove/refit the front detection radar or radar bracket.
- Remove/refit the front anti-collision beam.
- The four-wheel alignment parameters have changed.

Note: If the front detection radar is subject to strong vibration or slight impact, the mounting position of the front detection radar needs to be checked and re-calibrated as necessary.

Note: The calibration of front detection radar requires professional knowledge and tools. If calibration is required, please seek an MG Authorised Repairer.

Front radar performance will be effected in the following situations:

- When the front detection radar is covered by mud, snow, excessive water (rain) or water spray from the road.
- When the radar or surrounding areas are covered by objects such as labels or auxiliary lighting installation.
- When the front detection radar is subject to strong vibration or slight impact.
- Some targets may affect and weaken the detection capability of the front detection radar, such as road barriers, fences and tunnel entrances.

- When the front detection radar is affected by the environment, such as strong electromagnetic field interference or due to the target itself.
- Strong reflected radar signals (such as: in multi-storey car parks, tunnels, sprinkler spray systems or water jets etc). Experiencing any of these could cause the function of the front detection radar to be effected.

Note: Any snow that gathers on the front radar may be removed using a soft brush, and any ice should be removed using a propriety deicing spray.

Note: Avoid any collision or contact with the front radar module, this may cause misalignment.

Speed Assist System

The intelligent speed assist system is an auxiliary function. It may display an incorrect speed limit value or no speed limit value in the instrument pack due to various factors. As a result, the vehicle speed is not restricted within the correct range. The driver still needs to observe the speed limit of the road traffic, and speeding is strictly prohibited.

The front view camera cannot recognise speed limit signs painted on the road surface. The driver MUST observe these speed limits and adjust the their speed accordingly.

The speed assist system settings are available via the infotainment system. Enter the MG Pilot interface to locate the speed assistance system option and switch on or off the overspeed alarm function. When the adaptive cruise control system is OFF, you are able to choose from the intelligent speed limit function, manual speed limit function or not enabled.

60

1 Overspeed alarm: The vehicle detects a speed limit sign (as shown above) at the roadside with the front view camera. The speed limit sign identified will be displayed in the instrument pack. When the vehicle speed exceeds the speed limit by a preset amount, a visual warning in the instrument pack will flash.

2 Intelligent speed limit: The vehicle detects a speed limit sign (as shown above) at the roadside with the front view camera. The speed limit sign identified will be displayed in the instrument pack. The system will automatically intervene and maintain speed control to keep the vehicle speed within the permitted maximum speed limit. A visual warning will be utilised when over speed.

3 Manual speed limit: The driver sets the maximum speed using the adaptive cruise control lever. The system will actively intervene and keep the vehicle speed within the permitted maximum speed limit. A visual warning will be utilised when over speed. Please refer to the section "Speed settings of manual speed limit".

Speed assistance system setting

The operating interface for the speed assistance system is located in the infotainment display. Enter the MG Pilot interface to locate the speed assistance system option to find the setting interface for the speed assistance system:

1 Touch the corresponding button on the infotainment display to turn the overspeed alarm function On/Off.

2 Touch the corresponding button on the infotainment display to select the speed assist mode: intelligent speed limit, manual speed limit.

Speed settings of manual speed limit:

After the manual speed limit function is enabled, the speed limit value can be set by using the adaptive cruise control lever as follows:

1 Moving the control lever to adjust the speed limit. After the speed limit value is displayed in the instrument pack, press the SET button (3 in the figure below), the manual speed assist function will be

activated. When pressing the SET button, if the actual speed value is lower than the setting, the speed limit value displayed in the instrument pack will be defined as the setting. If the actual speed value is higher than the speed limit adjusted, the speed limit value displayed in the instrument pack will be defined as the current actual speed and rounded to the nearest value of 5mph (62mph will be defined as 65mph). The speed range is 20mph - 100mph. Moving the lever up or down once will increase or decrease the speed limit value by 5mph. Holding the lever up or down will continuously change the speed limit value in units of 5mph.

2 After the manual speed limit function is activated, the system will actively intervene and keep the vehicle speed within the target speed limit. If the current actual speed exceeds the target speed limit value set by the driver, the system will reduce the speed until it is below the target speed limit.

3 After the manual speed limit function is activated, the driver can press the SET button (3 in the figure below) on the adaptive cruise control lever to reinstate the system to the standby state. Press the SET button again, the manual speed assist function will be resumed.

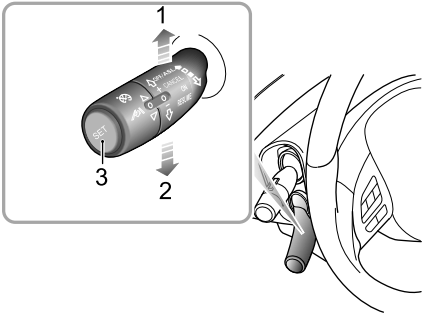

NNN When the overspeed alarm function or intelligent speed limit function is enabled, the speed limit value indication illuminates. When the vehicle passes the first speed limit sign identified, the speed limit indication displays the real-time speed limit value.

Note: When the vehicle needs to change lane, make a turn, or turn around at an intersection and the driver uses an indicator in advance and slows down, the original speed limit value on the instrument pack will be reset until a new speed limit sign is detected. If the conditions are not met, the original speed limit value will be maintained and not be reset. The driver MUST observe the speed limits and adjust their speed accordingly.

When the national speed limit sign is identified and the speed limit information function or intelligent speed assist function is enabled, the national speed limit indication illuminates. These two functions will work using 60mph as the national speed limit.

When the intelligent speed limit function is enabled, the system indicator lamp in the instrument pack illuminates yellow. When the function is activated by pressing the SET button on the adaptive cruise control lever, the system indicator lamp illuminates green. If the intelligent speed assist function detects a fault or failure, the indicator lamp will flash yellow then extinguish. Please try to restart this function. If this function cannot be turned on, please contact an MG Authorised Repairer.

When the front view camera detects a speed limit sign with a text message below, the warning lamp illuminates to remind the driver to read and act upon the message themselves. The camera cannot recognise the text messages provided below the speed limit sign, such as auxiliary lane, 100mls ahead, school section, 7:00-10:00. The camera will recognise the speed limit sign with text messages as a normal speed limit sign. The driver is required to make correct judgement according to the text message.

When the manual speed limit function is enabled, the system indicator lamp in the instrument pack illuminates yellow. When the function is activated by pressing the SET button on the adaptive cruise control lever, the system indicator lamp illuminates green. If the manual speed assist function detects a fault or failure, the indicator lamp will flash yellow then extinguish. Please try

to restart this function. If this function cannot be turned on, please contact an MG Authorised Repairer.

When the manual speed limit function is enabled, the speed limit value indication illuminates. Move the adaptive cruise control lever up and down to adjust the target speed limit value. The “NNN” will now show the adjusted speed limit value.

The driver can directly switch off, or temporarily suspend the intelligent speed limit function or manual speed limit function by carrying out the following actions:

1 To temporarily exceed the speed limit (overtaking manoeuvre), press the accelerator pedal hard. The indicator lamp in the instrument pack illuminates green, and the speed limit value flashes.

2 Gently press the SET button on the end of the adaptive cruise control lever, the indicator lamp in the instrument pack will change to yellow. Press the SET button again to resume the functions.

3 Move the adaptive cruise control lever to the “ON” position to switch the speed limit function off.

The overspeed alarm function and intelligent speed limit function may be impaired in the following situations:

1 The detection performance of the front view camera is affected.

2 The vehicle is driven at a high speed.

3 The speed limit signs are obscured along the road, for example: by trees, ice/frost, snow, dust, etc.

4 The speed limit signs are incorrectly placed or damaged.

5 There are multiple speed limit signs above the lane or on the sides of the road. Currently, the front view camera can only recognise the speed limit signs for the lane in which the vehicle is being driven.

6 Non standard speed limit signs or signs that contain additional information.

7 The speed limit signs set up at a fork in the road, on a bend or on-ramp/off-ramp.

8 During manoeuvres such as lane-changing.

IMPORTANT

- The camera may not correctly recognise speed limit signs during poor lighting conditions, bad weather, non-standardized or sheltered speed limit signs or the camera's own restrictions which include the recognition of similar signs (e.g., recognise a weight limit sign as a speed limit sign, or recognise a minimum speed sign as the maximum speed sign).
- Some drastic or rapid steering operations made by the driver may be judged as changing lane or turning around at an intersection by the system. This will result in the identified speed limit signs being cleared.

Lane Assist System

The lane assist system is an auxiliary system that provides assistance to the driver. It does NOT remove the responsibility of safe driving from the driver. When choosing to use the lane assist system, the driver MUST always pay attention to the surroundings, hold the steering wheel and be prepared to make manoeuvres at any time. Failure to maintain overall control of the vehicle may result in an accident or personal injury.

The lane assist system does not always recognise the lane lines and curbs. Sometimes poor road surfaces, certain road structures or objects may be mistaken for lane lines. When such situations occur, the lane assist system must be immediately turned off.

The lane assist system switch is located in the infotainment display. Enter the corresponding interface for driving

assistance to turn the system ON/OFF, and make mode selection.

Alert

The system uses the front view camera to detect the lane lines ahead of the vehicle. The system will be activated when the following detection conditions are met:

- The function is switched ON,
- Vehicle speed is above 37mph (60 km/h) ,
- Lane line markings are clear and the system recognises at least one lane line.

When a wheel is about to cross the lane line, or has already crossed the line, the system will provide warnings to prompt the driver to take action and maintain the vehicle position between the lane lines. The function will automatically exit when the vehicle speed drops below 33mph (55 km/h) .

Emergency lane keeping

The system uses the front view camera to detect the lane lines and curbs ahead of the vehicle. The system will be activated when the following detection conditions are met:

- The function is switched ON,
- Vehicle speed is above 37mph (60 km/h) ,
- Lane line markings are clear and the system recognises at least one lane line.

When a wheel is about to cross the lane line or curb, or has already crossed the line or curb, the system will provide assistance to the driver by attempting to keep the vehicle in between the lane lines by applying corrective steering intervention and simultaneously displaying a prompt. If the vehicle deviates from the lane lines too much , the system will activate the alert function. The function will automatically exit when the vehicle speed drops below 33mph (55 km/h) .

In the absence of a steering input from the driver for a certain period of time, the system will provide warnings.

IMPORTANT
• In cases where the number of lanes increase or lanes merge, the driver MUST take full control of the vehicle. • In areas where there are complex traffic conditions such as intersections or road junctions with congestion, the driver MUST take full control of the vehicle.

The lane assist system will be impaired or ineffective in the following conditions:

- The hazard lamps are activated.
- The driver indicates in the direction of the lane line about to be crossed.
- The driver applies the accelerator rapidly, carries out an emergency manoeuvre or makes a hard brake pedal application.
- The system detects that the driver has not moved the steering wheel for a preset time period (in the mode of emergency lane keeping).
- During system intervention the steering wheel is operated (in the mode of emergency lane keeping).
- The lane line is too thin, damaged, or fuzzy.
- The curb is irregular or damaged.
- The vehicle is being driven on a bend with a small curvature radius, the road is too narrow or too wide.
- The vehicle has just entered a road section with lane lines or is driven on a road section without lane lines.
- The vehicle changes lanes or sways laterally too fast.
- The vehicle is not in D.
- The vehicle speed is below 33mph (55 km/h) , or too high.
- The anti-lock brake system (ABS) and the dynamic stability control system (SCS) are activated.
- Faults exist in the anti-lock brake system (ABS), dynamic stability control system (SCS), electric power steering system (EPS), etc.

It is recommended to turn off the lane assist system in the following situations:

- Driving in a sports style or manner.
- Driving in bad weather conditions.
- Driving on rough or poor road surfaces.
- Driving through roadworks or construction sites.

Traffic Jam Assist System

The traffic jam assist system is an auxiliary system that provides assistance to the driver. It does NOT remove the responsibility of safe driving from the driver. When choosing to use the traffic jam assist system, due to the limitations of system detection and control, the driver must always be careful and hold the steering wheel at all times. The driver needs to correct or take over the steering wheel control if necessary. Failure to maintain overall control of the vehicle may result in an accident or personal injury.

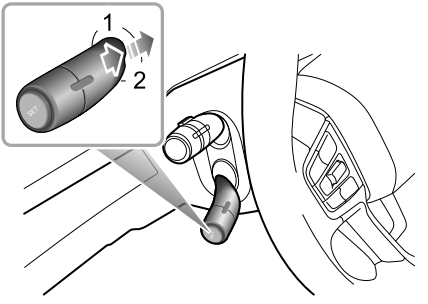

The traffic jam assist system switch is located in the infotainment display. Enter the corresponding interface for driving assistance to turn the system ON/OFF. Operating the adaptive cruise control level to "RESUME" twice will switch the traffic jam assist system into the standby or active state.

The traffic jam assist system works on the same basis as the adaptive cruise control system. The system will operate when the following conditions are met:

- The adaptive cruise control system is activated.
- The traffic jam assist system is switched on via the corresponding button in the infotainment system.
- The system detects lane lines on both sides of the vehicle.
- The vehicle is in D.

If the lane lines ahead on both sides are clear, the system can assist the vehicle in driving within the lane lines. When driving at low speed, if there is a vehicle ahead and the lane lines ahead on both sides aren't clear, the system also can assist the vehicle in following the track of the vehicle ahead.

In the absence of a steering input from the driver for a certain period of time, the system will provide warnings.

Note: The driver should adjust the vehicle speed and the following distance according to the road visibility, weather and road conditions. The traffic jam assist system does not respond to pedestrians, animals, stationary vehicles and vehicles that drive across the lane or oncoming vehicles in the same lane. If the traffic jam assist system cannot reduce the vehicle speed timely and effectively, the driver MUST apply the brakes. In congested conditions, should another vehicle cut into the lane being used by the vehicle under traffic jam assist system control, the system may not detect the vehicle in adequate time to make a braking manoeuvre. In this case the brakes should be applied by the driver.

The traffic jam assist system will be impaired or ineffective in the following conditions:

- The hazard lamps are activated.
- The driver indicates in the direction of the lane line about to be crossed.
- The driver applies the accelerator rapidly, carries out an emergency manoeuvre or makes a hard brake pedal application.
- The system detects that the driver has not moved the steering wheel for a preset time period.
- During system intervention, the steering wheel is being manipulated by the driver.
- The lane line is too thin, damaged, or fuzzy.
- The vehicle is being driven on a bend with a small curvature radius, the road is too narrow or too wide.

- The vehicle has just entered a road section with lane lines or is being driven on a road section without lane lines.
- The vehicle is not in D.
- The vehicle changes lanes or sways laterally too fast.
- The turning radius of the car using the traffic jam assist system to track in front is too small.
- The anti-lock brake system (ABS) and the dynamic stability control system (SCS) are activated.
- Faults exist in the anti-lock brake system (ABS), dynamic stability control system (SCS), electric power steering system (EPS), etc.

It is recommended to turn off the traffic jam assist system in the following situations:

- Driving in a sports style or manner.
- Driving in bad weather conditions.
- Driving on rough or poor road surfaces.
- Driving through roadworks or construction sites.
- Driving on steep, winding or slippery roads (such as snow covered and icy roads, wet roads and roads covered with water).
- Driving on grass tracks or unpaved roads.

IMPORTANT
• In cases where the number of lanes increase or lanes merge the driver MUST take full control of the vehicle. • In areas where there are complex traffic conditions such as intersections or road junctions with congestion, the driver MUST take full control. • The driver MUST be aware of the surroundings and be able to assume full control of the vehicle when using the traffic jam assist system to track the car in front should the need arise.

Forward Collision System

The driver remains responsible for the safety of the entire driving process, even if the vehicle is equipped with a forward collision system. The driver MUST pay full attention and drive carefully. As with all the driver assist systems, the forward collision system cannot prevent accidents or avoid collisions in all situations. The driver MUST always remain in control to avoid accidents or emergency situations.

Emergency braking whilst under the control of the forward collision system may cause injuries to the passengers. Therefore, drive carefully and all passengers MUST wear seat belts at all times.

Ensure the forward collision system or vehicle power system is switched off when being towed. If the forward collision system is enabled when the vehicle is being towed, adverse effects may affect the safety of your vehicle, the towing vehicle and the people around.

To avoid the occurrence of accidents, never specially test the functions of the forward collision system.

The forward collision system switch is located in the infotainment display. Enter the corresponding interface for driving assistance to turn the system ON/OFF, and make mode selection.

Alert

When the system detects that there is a risk of collision between the vehicle and the vehicle in front in the same lane, warnings will be provided to prompt the driver to slow down in time and keep a relatively safe distance from the vehicle ahead.

Emergency braking

When the system detects that there is a risk of collision between the vehicle and the vehicle directly in front of the vehicle, the brake system will automatically intervene to decelerate the vehicle, so as to avoid collision accidents or mitigate damage from collision accidents. If the vehicle is braked and stopped under the system control, it will remain stationary for a short time. Full control of the vehicle will then be returned to the driver.

Pedestrian auto emergency braking

When the system detects that there is a risk of collision between the vehicle and the mobile pedestrian directly in front of the vehicle, the brake system will automatically intervene to decelerate the vehicle, so as to avoid collision accidents or mitigate damage from collision accidents. If the vehicle is braked and stopped under the system control, it will remain stationary for a short time. Full control of the vehicle will then be returned to the driver.

The system will only slow down the vehicle automatically if the following conditions are met:

- The dynamic stability control system (SCS) and traction control system (TCS) are fault-free and ON.
- The vehicle is in D or N.
- The airbags are not deployed.

Note: In some cases, the driver may not have anticipated any braking intervention and does not want to apply the brakes whilst the forward collision system is braking heavily, the driver can temporarily cancel this operation by heavily pressing the accelerator pedal after ensuring that it is safe to do so.

The operation of the forward collision system may be impaired or ineffective in the following situations:

- The vehicle ahead approaches head-on, crosses the intersection or jumps the queue rapidly in a short distance.
- The vehicle ahead does not follow the rules of driving and parking (such as drives on the lane lines).
- The vehicle ahead is not in the same lane as your vehicle or the vehicle ahead is partially obscured.

- The vehicle ahead is an abnormal vehicle (modified or abnormal shape).
- The vehicle ahead is a vehicle with higher chassis.
- The vehicle ahead is a large vehicle at close range (such as tractor, trailer, towing vehicle, mud truck, sanitation truck, sprinkler truck etc.).
- The vehicle ahead is unusual transportation (such as a horse, cart, carriages etc.).
- The system detects the side of a vehicle.
- The contour of the vehicle ahead is unclear (such as water being sprayed by the wheels of the front and surrounding vehicles).
- The vehicle ahead does not have or has obscured tail lamps when driving at night or in a tunnel.
- The tail lamps of the vehicle ahead are all LED strip lights or other homemade coloured lamps.
- The street lights are inconsistent or flickering when driving at night.
- The pedestrian is not directly in front of the vehicle, or the pedestrian is not fully visible.
- The pedestrian is not standing upright, or it is a child under a certain height.
- There is a group of pedestrians in front of the vehicle that is over-shadowed or in the dark.
- There are animals in front of the vehicle.
- Objects such as special-shaped ground obstacles (e.g. roadblocks, isolation piles, isolation strips, large stones, other scattered objects etc.) are detected in front of the vehicle.
- Objects such as signs, guardrails, bridges, buildings or other are detected in front of the vehicle.
- The vehicle is being driven on a hillside road, upper and lower bridge section or tight bend.
- The vehicle is in R.
- The vehicle is in a state of braking or rapid acceleration.

Load Carrying

DO NOT exceed the gross vehicle weight or the permitted front and rear axle loads. Failure may result in vehicle damage or serious injury.

Loadspace Loading

Ensure that the rear seat backrests are securely latched in the upright position when loads are carried in the load space behind the seats.

When luggage is carried in the load space, always ensure heavy items are placed as low and as far forward as possible, so as to avoid the cargo shift in the event of an accident or sudden stop.

Drive carefully and avoid emergency braking or manoeuvres.

Driving with the tailgate open is very dangerous. If the load being carried requires the tailgate to be open, please ensure the cargo is suitably secured.

IMPORTANT
Traffic regulations must be observed when loading cargo, if the cargo extrudes the loadspace appropriate warning measures must be taken to warn other road users.

Internal Loading

DO NOT carry unsecured equipment, tools or luggage that could move, causing personal injury in the event of an accident, or emergency braking or hard acceleration.

DO NOT obstruct the driver's or passenger's vision with loads.

Folding the rear seats can increase luggage space, refer to “Rear Seats” described in the “Seats and Restraints” section.

When cargo is loaded in the vehicle, place it at a position as low as possible and ensure that it is tightly secured, so as to avoid personal injury caused by cargo movement when traffic accidents or emergency braking occurs. If the cargo has to be placed on a seat, then the seat must not be used by an occupant during that time.

General Towing Safety

Your vehicle can tow a trailer if you carefully observe load limits, use approved equipment, and follow the towing guidelines. Always check load limits before towing.

Towing loads in excess of the maximum towing weight can seriously affect vehicle handling and performance, and could damage your vehicles engine and drive-train.

Note: Exceeding any load limits advised by MG Motor is dangerous. Consult the recommended load limits and loading prior to any journey.

Check the loading of your vehicle and trailer carefully before starting to drive.

Trailer hitch load should never exceed the limit advised by MG Motor.

Note: Excessive towing loads reduce front tyre traction and steering control, too little trailer nose load can make the trailer unstable and cause it to sway.

Tow bars: Only genuine MG approved tow bars should be fitted to your vehicle. Only use the attachment method specified by the vehicle manufacturer for securing the towing hitch. Contact your authorised MG dealer for more information.

Safety chains: Safety chains must be used as a precautionary measure should the trailer become unintentionally unhitched. Make sure the safety chain is securely attached to both the trailer and the vehicle prior to departure.

Altitude: Your engine delivers less power at higher altitude. If you tow a trailer in a mountainous area you should reduce the combined vehicle and trailer weight by 10% for every 1000 m of elevation.

Gradients: Where possible, when towing, you should plan your journey to avoid steep gradients. The advised brake towing mass stated assumes a maximum gradient capability of 12%. Where possible it is recommended you drive on gradients less than 12%. Follow the trailer associations recommendations for suitable roads.

Running in period: Avoid towing a trailer during your vehicles first 1000 km.

Stop/Start function: On vehicles fitted with a Stop/Start function, manually switch the Automated

Stop/Start function OFF when towing. The trailer weight can affect your vehicle's braking efficiency if Automated Stop/Start is activated on a hill while towing a trailer.

Emergency Information

222 Hazard Warning Devices
223 Emergency Starting
225 Vehicle Recovery
230 Tyre Repair
235 Fuse Replacement
242 Bulb Replacement

Hazard Warning Devices

Warning Triangle

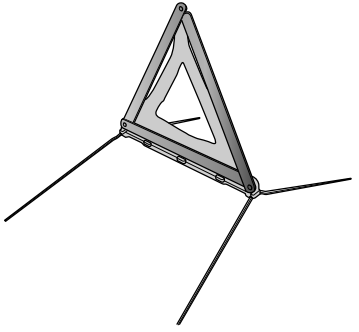

The warning triangle supplied with your car is stowed in the loadspace.

If you have to stop your car on the road in an emergency, you must place a warning triangle approximately 50 - 150 metres behind the car, if possible, and press the hazard warning switch to warn other road users of your position.

Emergency Starting

NEVER attempt to power the vehicle by pushing or towing.

Make sure that both batteries are of the same rated voltage (12 volts), and that the booster cables are approved for use with 12 volt car batteries.

Ensure sparks and naked flames are kept well away from the front compartment.

Ensure that each booster cable connection is securely made. There must be no risk of touching each other or other moving parts, this could cause sparking, which could lead to fire or explosion.

When the battery loses power, the booster cables can be used to connect the battery of a donor vehicle or external battery to start the vehicle.

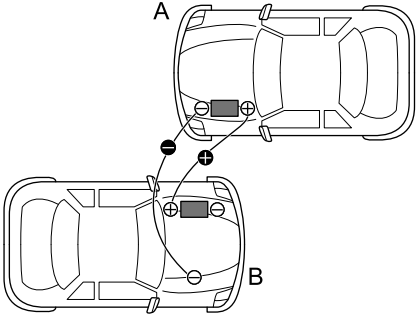

Ensure the START/STOP Switch is turned off and switch off ALL electrical equipment of BOTH vehicles, then follow the instructions below:

1 Connect the RED booster cable between the positive (+) terminals of both batteries. Connect the BLACK booster cable from the negative (-) terminal of the donor battery (A) to a good earth point (CCU housing or other unpainted surface, for example), as far away

from the battery as possible and well away from brake lines on the disabled vehicle (B).

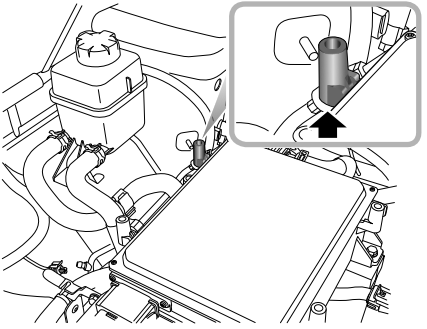

2 Power up or start the donor vehicle and allow it to run for a few minutes.

3 Power up or start the disabled vehicle. If the disabled vehicle does not power up or start after several attempts, it may need to be repaired. Please contact an MG Authorised Repairer.

4 After both the vehicles have normally started/powered, turn off the START/STOP Switch of the donor vehicle.

5 Disconnecting the booster cables must be an exact reversal of the procedure used to connect them, i.e. disconnect the BLACK cable from the earth point on the disabled vehicle FIRST.

IMPORTANT
DO NOT switch on any electrical appliance in the disabled vehicle until the booster cables have been disconnected.

Note: It is recommended to turn off lighting, air conditioning and other comfort appliances, and ensure that the disabled vehicle remains powered or runs for more than 1~2 hours after it is started, in order to recover the battery power. If the vehicle still fails to start/power normally after full charging, please contact an MG Authorised Repairer.

Vehicle Recovery

Towing for Recovery

Towing Hook

***DO NOT** tow the vehicle with any of the driving wheels in contact with the road surface, this will avoid electric drive transmission damage. When it is necessary to temporarily push or tow the vehicle from a dangerous situation or onto the transporter, the speed must remain below 5km/h and be completed within 3 minutes.*

To avoid damaging the vehicle, when temporarily pushing or towing the vehicle, the driver's side seat belt should be inserted and maintained in the lock and the electric drive transmission placed in Neutral in order to release the EPB.

***DO NOT** use a tow rope that is twisted - or the towing hook may be unscrewed.*

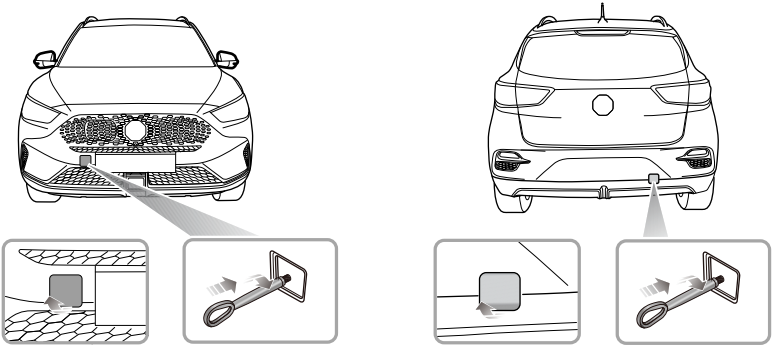

Your car is equipped with 2 towing eyes (located at the front and the rear of the vehicle), which are used for fitting the towing hook. The towing hook is placed beneath the loadspace floor. To fit the towing hook, remove the small cover set into the bumper, first press one end of the small cover plate, then open the small cover plate after the other end is lifted, then screw in the towing hook via the small hole into the threaded hole in the bumper beam (see illustration). Ensure the towing hook is fully tightened!

Note: The towing eye cover may be secured to the bumper by a plastic cord.

Both towing points are intended for use by qualified recovery specialists to assist in the recovery of your car when a breakdown or accident occur. They are not designed for towing other vehicles, and must NEVER be

used to tow a trailer or caravan. The vehicle can be towed using a tow rope but a towing bar is recommended.

Towing for Recovery

When towing, DO NOT suddenly accelerate or brake suddenly, this can cause accidents.

Suspended Towing

Suspended towing is the best method for recovering a vehicle that needs to be towed. The drive wheels MUST be suspended above the ground. Ensure the EPB is released when the rear wheels are in contact with the road surface. Switch the hazard lamps ON and ensure no passengers are in the vehicle.

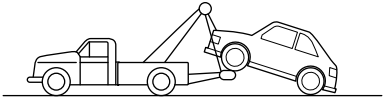

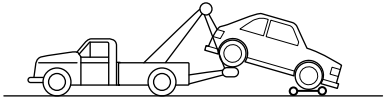

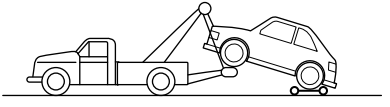

Transporter or Trailer

If your car is to be transported on the back of a trailer or transporter, it must be secured as illustrated:

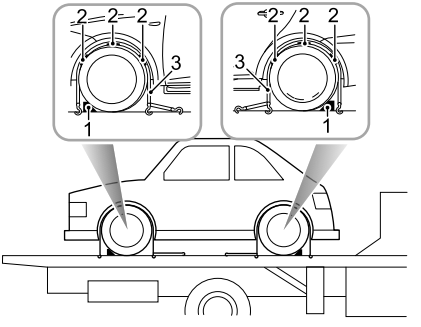

1 Apply the parking brake and place the electric drive transmission in park.

2 Fit wheel chocks (1) as shown, then position the anti slip rubber blocks (2) around the circumference of the tyre.

3 Fit the lashing straps (3) around the wheels and secure to the trailer. Tighten the straps until the car is securely held.

Tyre Repair

Your vehicle is equipped with low wind resistance wheel trim covers, which are fixed by snaps. If you need to remove or install the wheel trim cover, please pay attention to the following precautions:

- When removing the trim cover, it's better to pull the trim cover apart at several positions similar to 1 (see illustration). Please DO NOT pull the trim cover at other positions to avoid damaging it;
- When removing the trim cover, pull the five best pulling points one by one, and remove the wheel trim cover as a whole after all of them are pulled apart;
- When installing the trim cover, please check the valve mark on the back of the trim cover (as shown in the enlarged illustration), align the nearest hollow of the trim cover next to it with the valve on the wheel, and then install it to ensure that the valve can be exposed from the hollow. And then clamp the trim cover in place.

Note: When the new vehicle leaves the factory, the dust cap of the valve may be a little tight. It is recommended that you remove the wheel trim cover first during the first inflation operation, and then screw off the dust cap when there is enough space.

Note: If the pulling force required to remove the wheel trim cover is large, use a suitable tool to pull it out.

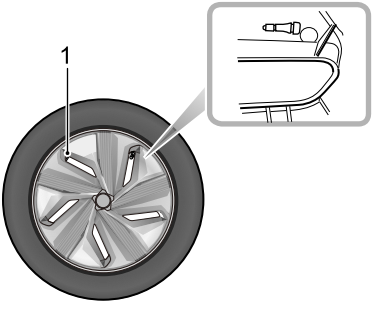

Tool Identification

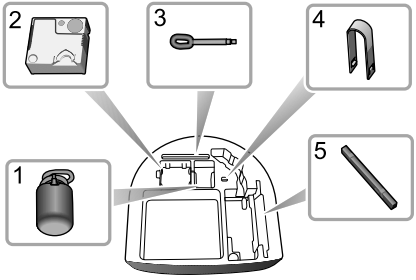

1 Repair Fluid

2 Electric Air Pump

3 Towing Hook

4 Wheel Bolt Cap Removal Tool

5 Warning Triangle

Tyre Repair

1 Remove the label at the bottom of the repair fluid reservoir and attach it to the steering wheel to remind the driver not to exceed 80 km/h.

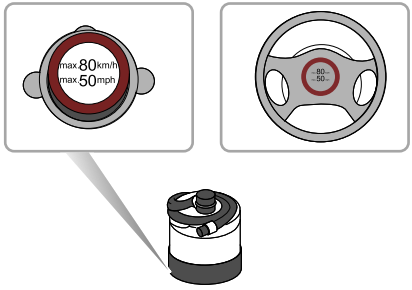

2 Connect the air hose of the electric air pump to the repair fluid reservoir, fit the tyre sealant bottle (upright) into the slot on the compressor. Remove the valve dust cap of the flat tyre, and connect the filler hose from the tyre sealant bottle to the tyre valve. Ensure that the power switch of the electric

air compressor is switched off (i.e., press “O”), then insert the plug from the compressor into the centre console power socket, and turn the vehicle power system to ON/READY.

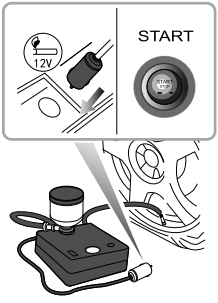

Note: To avoid battery discharge, it is recommended to keep the vehicle in P and READY mode.

3 Switch on the power switch of the electric compressor (i.e., press “-”), to start pumping sealant into the tyre. The tyre sealant bottle will become empty after approximately 30 seconds. The tyre should reach the specified pressure within 5 or 10 minutes.

Note: The pressure gauge may briefly reach 600kPa (6 bar), then the pressure begins to drop to normal.

4 When the required pressure is reached, switch off the power switch of the electric compressor (i.e., press “O”).

Note: If the required pressure cannot be reached within 10 minutes, please disconnect the compressor, drive the vehicle 10 metres approx forward or backward to allow the sealant to spread within the tyre. If the required pressure can still not be reached, the tyre is severely damaged and you should seek assistance from the Roadside Assistance company or an MG Authorised Repairer.

Note: Continual operation of the electric air compressor for more than 10 minutes may result in damage to the compressor.

Note: Under no circumstances should you continue your journey with a deflated tyre. Driving a vehicle with a deflated tyre is extremely dangerous.

5 Remove the tyre sealant bottle from the slot in the compressor, disconnect the hose from the tyre valve, remove the compressor plug from the centre console power socket, return the tyre repair kit to its stowage tray.

6 After successfully adding sealant to the tyre, drive immediately for a short time (around one minute). This will allow the sealant to distribute evenly inside the tyre. Continue driving and do not exceed 80 km/h. After a further 10 minutes, find a safe place to stop and recheck the tyre pressure.

Please follow different guidelines based on the tyre pressure measured:

- If the tyre pressure has dropped to less than 80 kPa (0.8 bar), do not continue driving, seek assistance instead.
- If the tyre pressure is between 80 kPa (0.8 bar) and specified pressure, use the electric air pump to inflate the tyre until it reaches the specified pressure. Repeat the operations of step 6.
- If the tyre pressure has not dropped, you may continue driving, but the vehicle speed must not exceed 80 km/h, and the driving mileage must not exceed 200km.

Note: Please regularly check the tyre sealant 'use by date' and replace as necessary.

Note: DO NOT remove foreign objects (eg. screws,nails) from the tyre. The tyre repair system must only be used when the foreign object is in the tread pattern (A), DO NOT attempt a repair when the damage is in the sidewall of the tyre (B).

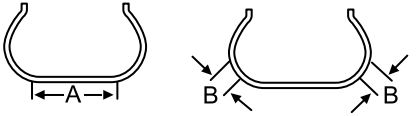
A
B
B

Fuse Replacement

Fuse

Fuses are simple circuit breakers which protect the vehicle electrical equipment by preventing the electrical circuits from being overloaded. A blown fuse results in the item of electrical equipment it protects failing to work.

Check a suspect fuse by removing it from the fuse box and looking for a break in the wire inside the fuse.

It is recommended to have spare fuses in the vehicle, these can be obtained from a local MG Authorised Repairer.

IMPORTANT
• NEVER attempt to repair a blown fuse. ALWAYS replace a fuse with one of the same rating. • If a replaced fuse fails immediately, please contact an MG Authorised Repairer as soon as possible.

Fuse Box

There are two fuse boxes in the vehicle：

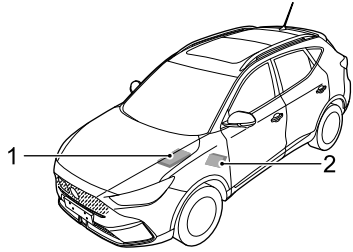

1 Front Compartment Fuse Box（at the left side of the Front Bay）.

2 Passenger Compartment Fuse Box（below the glove box at the front passenger side）.

Passenger Compartment Fuse Box

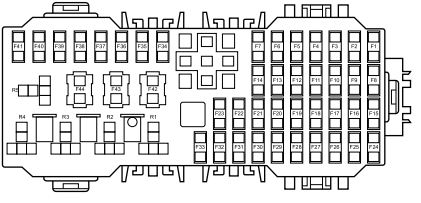

Check or Replace a Fuse

1 Switch off the vehicle power system and all electrical equipment, disconnect the battery negative cable.

2 Remove the closing panel below the glove box to gain access to the fuse box.

3 Press the fuse extraction tool onto the fuse head and pull to remove the fuse. A blown fuse can be recognised by a break in the wire.

4 Replace the blown fuse with a same rating.

Fuse Specification

NO.	Specs	Function
F1	5A	Charging Plug Lock Relay, Charging Plug Unlock Relay
F2	10A	Diagnostic Line Connector
F3	5A	Combined Charging Unit, Electric Vehicle Communication Controller, Battery Pressure Alarm Switch
F4	15A	Front Washer Relay, Rear Washer Relay
F5	5A	Sensing Diagnostic Module
F6	5A	High Voltage PTC, ESS PTC

NO.	Specs	Function
F7	10A	Energy Storage System
F8	5A	EPB Switch, Tyre Pressure Monitoring System
F9	5A	Vehicle Control Unit
F10	10A	Pedestrian Alert Control Module
F11	5A	Passive Entry Passive Start Module
F12	5A	Power Electronic Box
F13	30A	Driver Seat Adjust Switch
F14	5A	Backup Immobilizer Coil
F15	15A	Front Power Socket
F16	5A	Outside Mirror and Master Light Height Adjust Switch, Top USB, Left Headlamp Assembly, Right Headlamp Assembly
F17	5A	Phone Wireless Charger

NO.	Specs	Function
F18	5A	Rear USB
F19	5A	E-Call TBOX
F20	5A	TBOX
F21	10A	Around View Module, Radio Broadcasting Reception Module, Front Central Display
F22	10A	Exterior Mirrors Heating Element
F23	25A	Rear Windscreen Heating Element
F24	20A	Front Infotainment Control Module
F25	15A	Automatic Temperature Controller
F26	5A	Instrument Pack

NO.	Specs	Function
F27	10A	Information Faceplate, Outside Mirror and Master Light Height Adjust Switch, Driver Door Switch Pack
F28	5A	Rear Driving Assistance System, Rain Light Sensor
F29	10A	Gateway
F30	10A	Gateway
F31	30A	Sunroof Motor
F32	30A	Sunshade Motor
F33	5A	Shift Control Unit
F34	10A	Electronic Steering Column Lock
F35	15A	Super Lock Relay
F36	5A	Charging Flap Motor
F37–41	-	-

NO.	Specs	Function
F42	40A	Stability Control Module(Valve)
F43	30A	Driver Window Lifter, Rear Right Window Lift Switch
F44	30A	Passenger Window lift Switch, Rear Left Window Lift Switch

Front Compartment Fuse Box

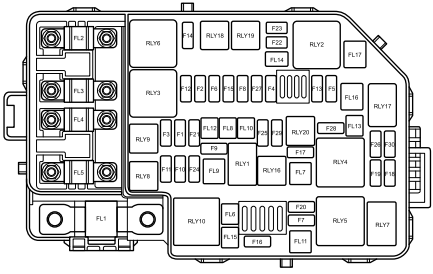

Check or Replace a Fuse

1 Switch off the vehicle power system and all electrical equipment, disconnect the battery negative cable.

2 Press the locating clips to remove the fuse box lid.

3 Press the fuse extraction tool onto the fuse head and pull to remove the fuse. A blown fuse can be recognized by a break in the wire.

4 Replace the fuse with a same rating.

Fuse Specification

NO.	Specs	Function
FL1	200A	Combined Charging Unit
FL2	80A	Electric Power Steering Module
FL3	40A	Cooling Fan Relay Pack
FL4	80A	Passenger Compartment Fuse F1-F7, F19-F21, F34, F35, F42, F44
FL5	80A	Windscreen/Mirror Heating Relay, Passenger Compartment Fuse F8-F14, F24-F33, F43

NO.	Specs	Function
FL6	-	-
FL7	40A	Automatic Temperature Controller, Blower
FL8	20A	Body Control Module
FL9	40A	Stability Control Module(Pump)
FL10	30A	Body Control Module
FL11	-	-
FL12	20A	Body Control Module
FL13	-	-
FL14	-	-
FL15	30A	KLR Relay
FL16	30A	Electric Parking Motor Control Unit
FL17	40A	EVP Relay
F1	-	-

NO.	Specs	Function
F2	15A	PEB Coolant Pump, Cooling Fan Relay Pack
F3	-	-
F4	-	-
F5	10A	Electric Air Conditioning Compressor
F6	-	-
F7	30A	Front Wiper Enable Relay, Front Wiper High/Low Speed Relay
F8	-	-
F9	-	-
F10	10A	Right Headlamp Assembly
F11	10A	Left Headlamp Assembly
F12	-	-
F13	15A	Horn Relay

NO.	Specs	Function
F14	-	-
F15	5A	Brake Pedal Switch
F16	15A	Rear Wiper Relay
F17	-	-
F18	5A	Sensing Diagnostic Module
F19	5A	Vehicle Control Unit
F20	-	-
F21	15A	Body Control Module
F22	10A	Front Left Seat Heating Relay
F23	10A	Front Right Seat Heating Relay
F24	-	-
F25	15A	Body Control Module
F26	-	-

NO.	Specs	Function
F27	5A	Body Control Module, EVP Relay, Front Breathing Lamp
F28	15A	ESS Coolant Pump Relay
F29	-	-
F30	10A	Shift Control Unit, Body Control Module, Instrument Pack, PDC Sensor, Front View Control Module, Front Detection Radar, E-Call TBOX, Airbag Display Module

Bulb Replacement

Bulb Specification

Lamp Bulb	Specifications
Headlamp High/Low Beam	LED
Front Direction Indicators	LED
Daytime Running Lamps	LED
Front Side Light	LED
Reverse Lamps	W16W 16W
Rear Direction Indicators	WY16W 16W
Rear Side Light	LED

Lamp Bulb	Specifications
Stop Lamps	LED
License Plate Lamps	W5W 5W
Rear Fog Lamps	LED
High Mounted Stop Lamp	LED
Interior Lamp (bulb configuration)	W5W 5W
Interior Lamp (LED configuration)	LED
Load Space Lamp	C10W 10W

Bulb Replacement

Before replacing any bulb, turn off the START/STOP Switch and lighting switch to avoid any possibility of a short circuit.

Note: MG only recommends replacement bulbs that completely meet the manufacturers specifications.

Take care NOT to touch the glass with your fingers; always use a cloth to handle the bulb. If necessary, clean the glass with methylated spirits to remove fingerprints.

If in doubt, when replacing bulbs, contact an MG Authorised Repairer.

For replacement of other bulbs not listed please consult an MG Authorised Repairer.

Interior Lamp Bulb Renewal (bulb configuration)

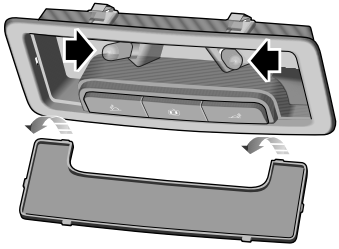

1 Lightly prize up lampshade from the lamp assembly with flat-blade screwdriver.

2 Pull the bulb out of the bulb holder.

The bulb refit procedure is in reverse order with the bulb removal procedure. When installing the lampshade, locate the two prongs at the front of the lampshade and then carefully flex the lampshade to locate the two prongs at the rear of the lampshade into the lamp assembly. Push the lampshade upwards until it ‘clicks’ into position.

Load Space Lamp Bulb Renewal

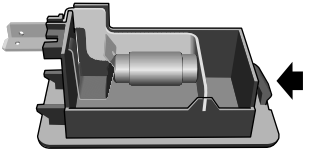

1 Insert a suitable tool or small flat bladed screwdriver into the indent on one of the narrow sides (as arrowed in figure) of the lens and carefully remove the unit from its location.

2 Push while rotating the bulb to remove it.

The bulb refit procedure is in reverse order with the bulb removal procedure.

Maintenance

246 Maintenance

249 Bonnet

251 Front Compartment

252 Cooling System

254 Brake

256 Battery

258 High Voltage Battery Pack

260 Washer

262 Wipers

265 Tyre

271 Cleaning and Vehicle Care

Maintenance

Routine Servicing

The safety, reliability and performance of your car will depend partly on how well it is maintained. You must ensure that maintenance is carried out when required and according to the information contained in the "Service Schedule" - see www.mg.co.uk - owners section.

Servicing

For next service information please consult your service records.

Some markets feature a service reminder in the IPK message centre.

Service History

Ensure MG Authorised Repairer registers the Service History after each service.

Brake Fluid Replacement

Replace the brake fluid according to the information contained in the "Service Schedule" - see www.mg.co.uk - owners section.

Note: Brake fluid replacement will be an additional cost.

Coolant Replacement

The coolant (anti-freeze and water solution) needs to be replaced according to the information contained in the "Service Schedule" - see www.mg.co.uk - owners section.

Note: Coolant replacement will be an additional cost.

Owner Maintenance

Any significant or sudden drop in fluid levels, or uneven tyre wear, should be reported without delay to MG Authorised Repairer.

In addition to the routine services referred to previously, a number of simple checks must be carried out more frequently. Advice is given on the pages that follow.

Daily Check

- Operation of lights, horn, wipers, washers and warning lamps.
- Operation of seat belts and brakes.
- Look for fluid deposits underneath the car that might indicate a leak.
- Check tyre appearance.

Weekly Check

- Coolant levels.
- Brake fluid level.
- Windscreen washer fluid level.
- Operate air conditioning.

Special Operating Conditions

If your car is frequently used in dusty conditions, or operated in extreme climates where sub-zero or very high ambient temperatures are normal, more frequent attention may need to be paid to servicing requirements. You need to carry out special maintenance operations (refer to Service Schedule) or contact an MG Authorised Repairer.

Safety in the Garage

Cooling fans may commence operating after the vehicle is switched off, and continue operating for a number of minutes. Keep clear of all fans while working in the front motor compartment

If you need to carry out maintenance, observe the following safety precautions at all times:

- If the car has been driven recently, DO NOT TOUCH cooling system components until the drive motor has been fully cooled down.
- DO NOT TOUCH electrical leads or components when the START/STOP Switch is on.

- DO NOT work underneath the car with a wheel changing jack as the only means of support.
- Wear protective clothing and work gloves.
- Remove watches and jewelery before working in the front compartment.
- DO NOT allow tools or metal parts of the car to make contact with the battery leads or terminals.

Toxic Liquid

Fluids used in motor vehicles are poisonous and should not be consumed or brought into contact with open wounds. These include: battery acid, coolant, brake fluid and windscreen washer fluid.

For your own safety, ALWAYS read and obey all instructions printed on labels and containers.

Bonnet

Opening the Bonnet

DO NOT drive when the bonnet is not closed or retained only by the safety catch.

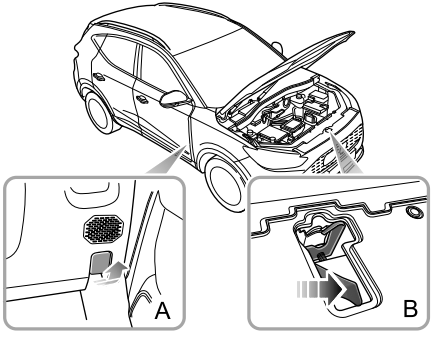

1 From the inside of the vehicle, pull the bonnet release handle (Figure A).

2 Move the safety catch release handle on the bonnet lock assembly in the direction of the arrow (Figure B) to release the bonnet safety catch.

3 Raise the bonnet and hold it up with the support rod firmly.

Closing the Bonnet

Support the bonnet by one hand, release the support rod using the other hand, and place it firmly into the support rod base. Then hold the bonnet using both hands and lower it, allowing it to drop for the last 20 cm ~ 30 cm to fully close the bonnet.

By attempting to lift the front edge of the bonnet, check if the lock is fully engaged after closing the bonnet. If it is not fully engaged, you must repeat the operation.

Bonnet Open Warning

If the bonnet is not fully engaged, when the vehicle power system is in the ON/READY position, the corresponding alarm icon will be displayed in the information message

centre of the instrument pack. If it is detected that the bonnet is not fully engaged whilst driving, an audible warning will sound.

IMPORTANT
• For safety reasons, the bonnet should be fully latched and secure when driving. Therefore every time the bonnet is opened, you must check after closing that the bonnet is securely latched, e.g. the bonnet edge is flush with the body of the car. • You should stop the car immediately when safety permits and close the bonnet if it is not closed fully when driving. • Beware of injury to hands while fully closing the bonnet with a downward force.

Front Compartment

While working in the front compartment, always observe the safety precautions listed under 'Safety in the Garage', refer to 'Maintenance' in 'Maintenance' section.

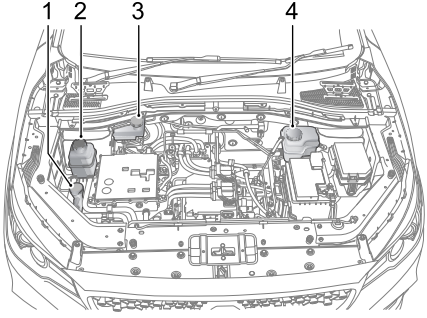

1 Washer fluid reservoir (blue cap)
2 Battery coolant expansion box (black cap)
3 Brake fluid reservoir (yellow/black cap)
4 Electric drive transmission coolant expansion box (black cap)

Cooling System

Coolant Check and Top Up

DO NOT remove the coolant expansion tank cap when the cooling system is hot - escaping steam or hot coolant could cause serious injury.

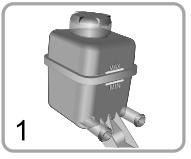

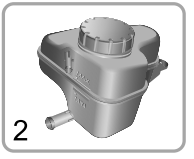

1 Battery Coolant Expansion Tank

2 Electric Drive Transmission Coolant Expansion Tank

The cooling system should be checked weekly when the cooling system is cold and with the car resting on level ground. If the coolant level is below the "MIN" mark, remove the coolant expansion tank cap and top up coolant. The coolant level should not be higher than the "MAX" mark.

Note: Prevent coolant from coming into contact with the vehicle body when topping up. Coolant will damage paint.

If the coolant level falls appreciably during a short period, and you suspect that there may be a leak, please seek an Authorised Repairer for service.

Coolant Specification

Please use the coolant which is recommended and certified. Please refer to 'Recommended Fluids and Capacities' in the "Technical Data" section.

Note: The addition of corrosion inhibitors or other additives to the cooling system of this car may severely disrupt the efficiency of the system and cause parts

damage. For cooling system issues please consult an Authorised Repairer.

Coolant is poisonous and can be fatal if swallowed - keep coolant containers sealed and out of the reach of children. If accidental contact of coolant by children is suspected, seek medical assistance immediately.

Prevent the coolant from coming into contact with the skin or eyes. If this occurs, rinse immediately with plenty of water. If eyes are still red, painful or uncomfortable, seek medical attention immediately.

Brake

DO NOT rest your foot on the brake pedal while driving, which may overheat the brake system, thus reduce brake efficiency and cause excessive wear.

The free displacement of the brake pedal is 0 ~ 30 mm.

Wear rates for brake pads and discs may vary. The recommended minimum thickness of brake pads is 2 mm. The recommended thickness of front brake discs is 23 ~ 25 mm and the recommended minimum thickness of rear brake discs is 8 ~ 10 mm.

For the first 1500 km, you should avoid situations where heavy braking is required.

Please regularly check the wear condition of all components of the brake system within the time interval prescribed in Service Portfolio and replace them if necessary to ensure the long—term safety and optimum performance .

The vehicle needs to run in for 800 km after replacing brake pads or discs.

Brake Fluid Check and Top Up

Brake fluid is highly toxic, keep containers sealed and out of the reach of children. If accidental contact of brake fluid is suspected, seek medical attention immediately.

Prevent brake fluid coming into contact with the skin or eyes. If this occurs, rinse immediately with plenty of water. If eyes are still red, painful or uncomfortable, seek medical attention immediately.

The brake fluid level should be checked weekly when the system is cold and with the vehicle on level ground.

The fluid level can be seen through the reservoir and should be maintained between 'MAX' and 'MIN' mark.

Note: Do not allow the fluid level to drop below 'MIN' mark or rise above 'MAX' mark.

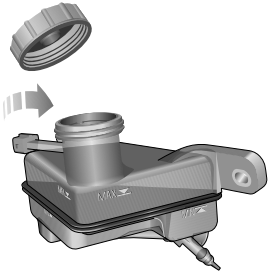

Note: Brake fluid can damage painted surfaces. If you accidentally spill the brake fluid on the painted surface, soak up any spillage with an absorbent cloth immediately and wash the area with water or car shampoo.

Brake Fluid Specification

Use the brake fluid recommended and certified by the manufacturer. Refer to 'Recommended Fluids and Capacities' in 'Technical Data' chapter.

IMPORTANT
Replace brake fluid regularly according to the Service Portfolio.

Battery

Battery Maintenance

DO NOT leave electric components switched on when not in READY mode, this may cause the battery to become flat, resulting in the failure of the ability to set vehicle into READY mode and the reduction of battery life.

Always store batteries upright, tilting may allow the corrosive substances contained within the battery to leak out.

Never attempt to dismantle a battery, they are sealed units.

The battery is located in the front compartment and is maintenance-free, therefore there is no need to refill fluid.

According to the current load condition and battery status, the system may limit the power of some electrical appliances. Please ensure the vehicle is placed in READY mode as soon as possible to charge the battery.

Note: It is recommended to ensure the vehicle is placed in READY mode for half an hour every week to help extend the service life of the battery. If the vehicle is stored for more than 1 month, remove the negative terminal from the battery. Make sure that the vehicle power system has been turned off before connecting or disconnecting the negative terminal.

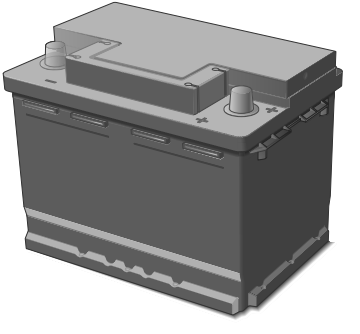

Battery Replacement

The battery contains sulphuric acid, which is corrosive.

Please go to an MG Authorised Repairer to remove and refit the battery. Only fit a replacement battery of the same type and specification as the original to maintain the correct vehicle functionality.

The used battery should not be discarded at will, for it is harmful to the environment. It must be recycled by professional institutes. Please consult an MG Authorised Repairer for more details.

High Voltage Battery Pack

Precautions and restricted conditions for use of battery

If the vehicle is not going to be used, parked, or stored for a long time it is necessary to charge the vehicle at least once every 3 months. During this time, the High Voltage battery state of charge should not be allowed to drop below 50%.

If the battery is in a low state of charge and the instrument pack displays no valid driving range, the vehicle MUST NOT be left in a stored state for more than 7 days without being charged to above 50%.

Failure to follow these guidelines will result in HV battery damage and invalidate the warranty.

DO NOT attempt to dismantle the battery pack or any High Voltage components - THESE ARE DANGEROUS. Any signs of dismantling or damage caused by attempts to dismantle will invalidate the warranty.

When using a paint curing oven please observe the following:
Before and after any paint baking process, the vehicle should be parked at room temperature (20 ± 2 ℃) for 24 hours. The vehicle can be used normally after being parked for 24 hours. The baking oven temperature should not exceed 80 ℃ and the baking time should not be longer than 30 minutes.

1 DO NOT park the vehicle in conditions where the ambient temperature exceeds 45°C for more than 15 days. This will effect the performance and service life of the high voltage battery.

2 To maintain or improve the service life of the high voltage battery, it is recommended that you use a slow

charging method wherever possible, rapid charging should only be used for long distance journeys or emergencies.

3 It is recommended using the vehicle at least once a month.

Where possible it is recommended that you carry out a slow charge (equalisation charging) every month to extend the service life of high-voltage battery pack. The battery management system will monitor the status of the high voltage battery pack. After monitoring for a period of time, if an equalisation charge has not been carried out for some time the message centre in the instrument pack will display 'Please Slow-charge the Vehicle'. At this time you must carry out an equalisation charge. For operation mode, please refer to 'Equalisation Charging' in 'Starting & Driving' section.

4 When the vehicle is used for the first time or after a long period of storage, the SOC displayed in the instrument pack may not be accurate. A full charge is recommended before use. (Battery pack type 2)

5 In the event of an accident, damage to the high voltage battery or any of its related components, or any repairs made to the high voltage system the car must be inspected by qualified personel at an MG Authorised Repairer.

6 In the event of any accident or body repairs being required please consult the qualified personnel at an MG Authorised Repairer. The repair may require high voltage battery isolation or specialist HV component removal.

IMPORTANT
Only fully trained and qualified personel are allowed to work on the high voltage systems and components of this vehicle. Any disassembly of such systems or components is strictly prohibited.

Washer

Washer Fluid Check and Top Up

Windscreen washer fluid is flammable. DO NOT allow windscreen washer fluid to come into contact with naked flames or sources of ignition.

When filling the washer fluid, DO NOT let the washer fluid spill on parts around the engine, motor, electric drive transmission or on the paint surface of the vehicle body. In case the washer fluid is spilled on hands or other parts of the body, please immediately wash with clean water.

The washer fluid is used to clean the windshield. Check the washer fluid level regularly. When the level of washer fluid is low, please top up the washer fluid as instructed. Please use the washer fluid recommended and certified by the manufacturer. Refer to 'Recommended Fluids and Capacities' in "Technical Data" chapter.

Note: DO NOT use an anti-freeze or vinegar/water solution in the washer reservoir - anti-freeze will damage paintwork while vinegar will damage the washer pump.

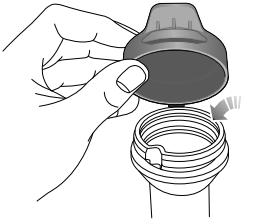

IMPORTANT
• Use the washer fluid recommended and certified by the manufacturer. Misuse of washer fluid in winter may cause damage to the washer motor due to freezing. • Using the washer switch when there is no washer fluid may cause damage to the washer motor. • Operating the wipers when the windscreen is dry and there is no washer fluid may cause damage to the windscreen and wipers. Please spray the washer fluid and start the wipers when there is adequate washer fluid.

Washer Nozzles

Operate the washers periodically to check that the nozzles are clear and properly directed.

If the nozzle is obstructed, insert a needle or thin metal wire into the hole to remove the obstruction.

Wipers

Wiper Blades

IMPORTANT
• Grease, silicon and petrol based products impair the blade's wiping capability. Wash the wiper blades in warm soapy water and periodically check their condition. • Clean the windscreen frequently, DO NOT use wipers to remove stubborn or ingrained dirt, it will reduce their effect and their life span. • If signs of hardness or cracking in the rubber are found, or if the wipers leave streaks or unwiped areas on the screen, then the wiper blades should be replaced. • Clean the windscreen regularly with an approved glass cleaner and ensure the screen is thoroughly cleaned before fitting replacement wiper blades. • Only fit replacement wiper blades that are identical to the original specification. • Clean ice and snow from around wipers and ensure they are not frozen or otherwise sticking to the windscreen before attempting to operate them.

Replacing Front Wiper Blades

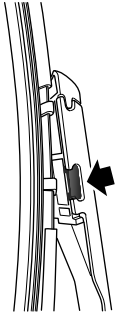

1 With the bonnet closed, and within 20 seconds of switching the START/STOP Switch to the OFF position, operate the wiper stalk switch by pressing down and releasing, the wipers will sweep and stop in the 'service position' on the windscreen.

2 Lift the wiper arm away from the windscreen.

3 Press the retaining clips at both sides (as shown in the figure), whilst pulling the wiper blade outward, to remove the wiper blade from the wiper arm and discard.

4 Position the fitting of the new wiper blade into the slot of the wiper arm.

5 Push the wiper blade towards the wiper arm until it is located embedded with a click been heard.

6 Place the wiper assembly back on the windscreen.

7 To exit the service mode and return the wipers to the park position, operate the wiper stalk switch again by pressing down and releasing, alternatively, turn on the vehicle power system.

Replacing Rear Wiper Blades

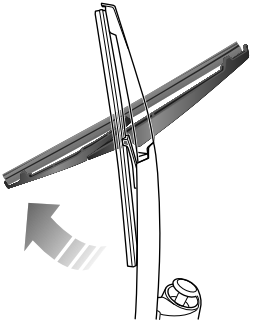

1 Lift the wiper arm away from the rear window.

2 Rotate the wiper blade as shown in the figure, to remove it from the wiper arm and discard.

3 Position the fitting of the new wiper blade into the slot of the wiper arm. Ensure the wiper blade is properly secured on the wiper arm.

4 Place the wiper assembly back on the rear window.

Tyre

Overview

- New tyres may not have the best adhesive ability at the beginning. Therefore, driving your vehicle at moderate speed and in a prudent way at the first 500 km/h, which is also beneficial to the service life of the tyres.
- Regularly check tyres for signs of damage. DO NOT remove foreign objects such as screws or nails from the tyre. If a tyre shows any signs of damage, please ensure it is inspected by a reputable tyre fitter for advice.
- The valve dust cap must be fitted to prevent dust from entering the valve.
- If the tyre is to be removed, always mark the tyre/wheel orientation to ensure correct reinstallation.
- Store the removed wheel or tyre in a cool, dry and dark place.

The damage of a tyre or rim may happen unnoticed. If abnormal vibration or deviation is experienced, that means the tyre may have been damaged. If you suspect that a tyre is damaged, please slow down immediately, and stop your vehicle to check the tyre for damage. If you can't see the damage from the outside, continue driving the vehicle slowly to the nearest MG Authorised Repairer for inspection and service.

Tyre Life

Correct tyre pressures and moderate driving style can extend tyre life. Recommendations:

- Check the tyre pressures at least once a month, it should be carried out when the tyre is cold;
- Avoid cornering at excessive speeds;
- Check tyres frequently for abnormal wear;
- When the vehicle is to be parked for a long time, the vehicle should be moved at least once every two weeks to prevent permanent deformation of the tyres due to long-term stress.

The following factors affect the tyre life:

Tyre Pressure

Incorrect pressure will cause the abnormal wear of the tyre, greatly shorten the service life, and have an adverse effect on the driving characteristics of the vehicle.

Driving Style

Excessively harsh acceleration and braking whilst cornering will reduce tyre life.

Wheel Balance

Every new vehicle leaves the factory having had the wheels dynamically balanced. Out of balance wheels may be due to many factors. If wheels are out of balance, shaking or vibration of the steering mechanism may occur and the tyres may start to wear excessively. It is important to restore wheel balance as quick as possible. Each wheel should be rebalanced after installing a new tyre or having a tyre repair.

Wheel Alignment

Incorrect wheel alignment can cause excessive tyre wear and affect vehicle safety. If the tyres show signs of abnormal wear, check the wheel alignment and seek advice from an MG Authorised Repairer.

Caring for your Tyres

DEFECTIVE TYRES ARE EXTREMELY DANGEROUS! DO NOT drive if any tyre is damaged, excessively worn, or incorrectly inflated.

It is recommended to install the tyres consistent with the original specifications. DO NOT replace the tyres with tyres of any other type. Alternative tyres, of a different specification, may adversely affect the vehicle's driving characteristics and safety. In order to retain the original safety characteristics it is suggested that you consult an MG Authorised Repairer.

Always drive with consideration for the condition of the tyres, and regularly inspect the tread and side walls for any sign of distortion (bulges), cuts or wear.

If possible, protect tyres from contamination by oil, grease and fuel.

Tyre Pressure

Before a long distance journey, the tyre pressures should be checked.

Check the pressures (including the spare wheel if fitted) at least every month. Carry out pressure checks when the tyres are cold.

If it is necessary to check the tyres when they are warm, you should expect the pressures to have increased by 30 ~ 40kPa (0.3 ~ 0.4bar). In this circumstance, NEVER let air out of the tyres in order to match the recommended pressures (cold) in the technical data.

Valves

Keep the valve caps firmly secured to prevent dirt from entering the valve. Check the valve for leaks (listen for a tell-tale hissing) when you check the tyre pressure.

Punctured Tyres

Your vehicle is fitted with tyres which may not leak if penetrated by a sharp object, provided the object remains in the tyre. If you are aware of this occurring, reduce speed immediately and drive with caution until the spare wheel can be fitted, or repairs undertaken.

Note: If the sidewall of the tyre is damaged or distorted, replace the tyre immediately. Do not attempt a repair.

Tyre Wear Indicators

Tyres fitted as original equipment have wear indicators moulded into the tread pattern at several points around the circumference. When the tread has worn down to 1.6mm the indicators will come to the surface of the tread pattern, producing the effect of a continuous band of rubber across the width of the tyre.

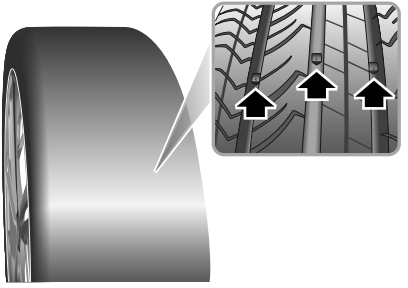

IMPORTANT
A tyre MUST be replaced as soon as a wear indicator becomes visible. Otherwise there may be a risk of accidents.

Tyre Rotation

It is recommended that you swap wheels from side to side or front to rear at irregular intervals in order to equalise tyre wear.

In cases of even front tyre wear, it is recommended to exchange the front and rear wheels as shown in the figure. This can equalise tyre wear, extend tyre life, and uniform tyre fatigue.

Swapping the driven wheels diagonally is not advised, therefore, on AWD models it is not recommended to change any wheels diagonally, front to rear change is permissible. Swapping non driven wheels is allowed, therefore on 2WD models it is permissible to swap wheels diagonally whilst considering the DOR advice.

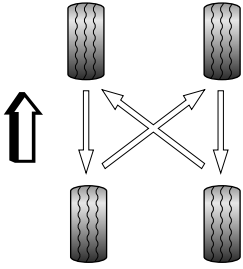

Note: Directional tyres are marked with 'direction of rotation' (DOR). To maintain driving characteristics, tyres must always be fitted with indication arrow showing the correct 'DOR'. When the tyre tread pattern is directional, the wheels must not be exchanged diagonally or left to right but can be exchanged front to rear.

Note: After any tyre/wheel rotation, the vehicle must be driven at a speed of 40 km/h for about 10 minutes to correctly indicate the tyre pressure value at the corresponding position.

Tyre/Snow Chains

Unsuitable tyre/snow chains may damage the tyres, wheels, suspension, brakes or bodywork of your vehicle.

Please pay attention to the following requirements during usage:

- The tyre/snow chains can only be fitted on the drive wheels;
- The thickness of tyre/snow chains must not exceed 15mm;
- Please always observe the installation and tension instructions for the tyre/snow chains, as well as the speed limits of different roads;
- Do not drive faster than 50 km/h;
- To avoid the tyre damage and excessive wear of the tyre/snow chains, the tyre/snow chains must be removed while driving on the road without snow.

For this vehicle, the only specification of wheels and tyres that will support tyre/snow chains are as follows:

Wheel rim size: 6.5J×16

Tyre size: 205/60 R16

Note: If you often drive on snow covered and icy roads, it is recommended to use winter tyres. Please consult an MG Authorised Repairer for details.

Cleaning and Vehicle Care

Observe all safety precautions on cleaning products; Do Not drink fluids and keep them away from the eyes.

Exterior

Washing Your Car

Some high pressure cleaning systems will penetrate door, window and sunroof seals, and damage lock mechanisms. DO NOT aim water jets directly at components that might be easily damaged. Ensure the vehicle power system is OFF when washing your car.

Do not clean the front compartment with high pressure water since it may damage the electrical system of the vehicle.

In order to preserve the paint finish on your car, please observe the following care points:

- DO NOT use hot water to wash the car.
- DO NOT use detergents or washing up liquid.
- In hot weather, DO NOT wash the car in direct sunlight.
- When using a hose, DO NOT aim the water directly at window, door or sunroof seals, or through wheel apertures onto the brake components.

If the car is particularly dirty, use a hose to flush grime and grit from the bodywork, prior to washing. Then, wash the car using cold or lukewarm water containing a good quality wash and wax shampoo. Always use plenty of water to ensure that grit is flushed from the surface and not ground into the paintwork. After washing, rinse the bodywork with clean water and dry off with a chamois leather.

Cleaning the underside

Note: DO NOT use a high pressure hose to clean the front compartment – damage to the car's electronic systems may occur.

From time to time, but particularly during winter months when salt has been used on the roads, use a hose to wash the underside of the car. Flush away accumulations of mud and thoroughly clean those areas where debris can easily collect (wheel arches and panel seams, for example).

IMPORTANT
• Avoid cleaning the vehicle in direct sunlight. • When cleaning the vehicle in winter avoid spraying water directly onto door locks and panel gaps due to risk of icing. • Do not use rough sponges or cloth to clean the car, this will damage the paintwork finish. • When cleaning the headlamps do not use a dry cloth or sponge, use only warm soapy water.

Cleaning with a High Pressure Cleaner

Note: Always read the manufacturers operating instructions.

When using high pressure washers, always ensure there is adequate distance between the spray nozzle and any soft materials, decals or rubber seals.

Note: DO NOT direct the pressure washer nozzle directly toward the high voltage charging point or high voltage battery connections on the underside of the vehicle.

IMPORTANT
• Please pay attention to the operating instructions of high pressure cleaner. • High pressure cleaners should not be closely directed at soft parts of the vehicle.

Removing tar spots

Use white spirit to remove tar spots and stubborn grease stains from the paintwork. Then wash the area immediately with soapy water to remove all traces of the spirit.

Body Protection

After washing, examine the paintwork for damage. If the damage has revealed bare metal, use a colored primer first, then apply the correct colour base coat and finish off with a lacquer pencil, if appropriate. Carry out this treatment after washing but before polishing or waxing. More extensive damage to paint or bodywork must be repaired in accordance with the manufacturer's recommendations. Failure to do this will invalidate the Anti-Corrosion Warranty. If in doubt, ask your MG Authorised Repairer.

Polishing the Paintwork

DO NOT use car polish containing coarse abrasives – these will remove the paint film and damage the gloss finish.

Occasionally treat the paint surface with an approved polish containing the following properties:

- Very mild abrasives to remove surface contamination without removing or damaging the paint.
- Filling compounds that will fill scratches and reduce their visibility.
- Wax to provide a protective coating between the paint and the elements.

Note: If possible, avoid applying polish or wax products to window glass and rubber seals.

Wiper Blades

Wash in warm soapy water. DO NOT use spirit or solvent based cleaners.

Windows and Mirrors

Regularly clean all windows, inside and out, using an approved glass cleaner.

Windscreen: In particular, clean the outside of the screen with glass cleaner after washing the car with wash and wax products, and before fitting new wiper blades.

Rear screen: Clean the inside with a soft cloth, using a side to side motion to avoid damaging the heating elements.

Note: DO NOT scrape or use abrasive cleaners on the inside of the rear screen – this will damage the heating elements.

Mirrors: Wash with soapy water. Use a plastic scraper to remove ice. DO NOT use abrasive cleaning compounds or metal scraper.

Plastic Components

Any plastic components should be cleaned using conventional cleaning methods and not be treated with abrasive materials.

Paint Damage

Any paint damage or stonechips should be treated with suitable paint/lacquer materials immediately to avoid invalidating the Anti Corrosion Warranty.

Weather Strips and Rubber Seals

Any weather strips or rubber aperture seals should be treated with suitable materials (silica gel) if they are cleaned using strong detergents, this should avoid any sticking and maintain the service life of the seal.

Wheels

When cleaning the wheels any materials or water that contact the brake disc directly may effect braking efficiency.

In order to ensure the wheels are kept in optimum condition they should be cleaned regularly.

Only use a recommended non-acidic propriety wheel cleaner. Always read the instructions on the product.

Cleaning the Interior

Plastic materials

Clean plastic-faced materials with diluted upholstery cleaner, then wipe with a damp cloth.

Note: DO NOT polish dashboard components – these should remain non-reflective.

Carpet and fabrics

Clean with diluted upholstery cleaner - test a concealed area first.

Leather

Clean leather trim with warm water and a non-detergent soap. Dry and polish the leather with a dry, clean, lint-free cloth.

Note: DO NOT use petrol, detergents, furniture creams or polishes as cleaning agents.

Instrument Pack, Audio and Navigation Display

Clean with a dry cloth only. DO NOT use cleaning fluids or sprays.

Airbag Module Covers

DO NOT allow these areas to be flooded with liquid and DO NOT use petrol, detergent, furniture cream or polishes.

To protect damage to the airbag SRS, the following areas should be cleaned sparingly with a damp cloth and upholstery cleaner ONLY:

- Steering wheel centre pad.
- Area of dashboard containing the passenger airbag.
- Area of roof lining and front pillar finishers which enclose the side head impact protection modules.

Seat Belts

DO NOT use bleaches, dyes or cleaning solvents on seat belts.

Extend the belts, then use warm water and a non-detergent soap to clean. Allow the belts to dry naturally; DO NOT retract them or use the car until they are completely dry.

Technical Data

278 Technical Data Dimensions

279 Weights

281 Parameters of Traction Motor

282 Recommended Fluids and Capacities

283 Wheel Alignment (Unladen Condition)

283 Wheels and Tyres

283 Tyre Pressure (Cold)

Technical Data Dimensions

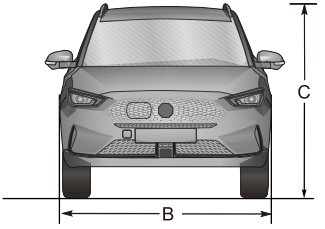

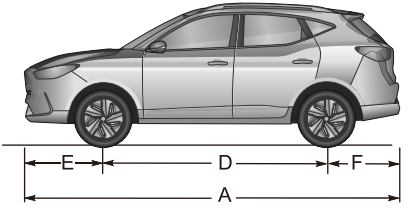

Item, Units	Parameters
Overall length A, mm	4323
Overall width B, mm	1809
Overall height C (unladen), mm	1625(body height) 1649(with rack)
Wheelbase D , mm	2585
Front Overhang E , mm	901
Rear Overhang F , mm	837

Item, Units	Parameters
Front Wheel Track , mm	1526
Rear Wheel Track , mm	1539
Minimum Turning Diameter , m	11.2

Note: Vehicle length not including the license plate.

Note: Rearview mirrors and the deformed portion of tyre wall directly above the touchdown point are not included in the total width.

Weights

Item, Units	Parameters	
	TL1	TL2
Person in cab, person	5	
Unladen vehicle weight (kerb), kg	1570	1610
Gross vehicle weight, kg	2060	2060
Unladen front axle weight, kg	891	908
Unladen rear axle weight, kg	679	702
Gross front axle weight, kg	1014	1014
Gross rear axle weight, kg	1046	1046

Towing Weights

Item, Units	Parameters
Towing limit unbraked, kg	500
Towing limit braked, kg	500
Towing hitch load, kg	50

Note: When towing a trailer, the vehicle speed MUST not exceed 100km/h.

Note: Prior to towing a trailer, please check the rear tyre pressures, inflate to at least 20kPa (0.2bar) above the recommended pressure - DO NOT allow the tyre pressure to exceed 300kPa (3.0bar), this can be dangerous.

Parameters of Traction Motor

Item, Units	Parameter Values
Traction motor type	Three-phase permanent magnet synchronous motor
Continuous Power/Maximum Net Power, kW	75/130
Peak Torque, Nm	280
Maximum Speed, rpm	15000

Recommended Fluids and Capacities

Name	Grade	Capacity
Electric drive transmission coolant, L	Glycol (OAT)	4.8
High-voltage battery pack coolant, L		5.6
Electric drive transmission oil, L	Shell E-Fluids E6 iX (SL2808)	0.9
Brake fluid, L	DOT 4	0.85
Windshield detergent, L	ZY-VIII	4
Air conditioning refrigerant, g	R-134a	540±20

Wheel Alignment (Unladen Condition)

Item		Parameter
Front	Camber angle	-35¢±45¢
	Castor angle	4°1¢±45¢
	Toe-in (Total)	8¢±15¢
	King pin inclination	12°4¢±45¢
Rear	Camber angle	-1°15¢±45¢
	Toe-in (Total)	24¢±20¢

Wheels and Tyres

Wheel size	7.0J×17
Tyre size	215/55 R17

Tyre Pressure (Cold)

Wheels	Unladen
Front Wheels	280kPa/2.8bar/41psi
Rear Wheels	280kPa/2.8bar/41psi